FLOWSTAR 2002 CNG™

USER'S MANUAL

HP-243
April 1996

HOFFER Flow Controls

Perfecting Measurement™

107 Kitty Hawk Lane • P.O. Box 2145 • Elizabeth City, NC 27909
1-800-628-4584 • (252) 331-1997 • Fax (252) 331-2886
www.hofferflow.com email: info@hofferflow.com

Trademark Notices

HyperTerminal is a registered trademark of Hilgraeve, Inc.

Windows is registered trademark of Microsoft, Inc.

ProComm is a registered trademark of Data Storm Technologies.

CrossTalk is a registered trademark of Attachmate Inc.

Disclaimers

Specifications are subject to change without notice.

Some pages are left intentionally blank.

Notice

HOFFER FLOW CONTROLS, INC. MAKES NO WARRANTY OF ANY KIND WITH REGARD TO THIS MATERIAL, INCLUDING, BUT NOT LIMITED TO, THE IMPLIED WARRANTIES OF MERCHANTABILITY AND FITNESS FOR A PARTICULAR PURPOSE.

This manual has been provided as an aid in installing, connecting, calibrating, operating, and servicing this unit. Every precaution for accuracy has been taken in the preparation of this manual; however, HOFFER FLOW CONTROLS, INC. neither assumes responsibility for any omissions or errors that may appear nor assumes liability for any damages that may result from the use of products in accordance with information contained in the manual.

HOFFER FLOW CONTROLS' policy is to provide a user manual for each item supplied. Therefore, all applicable user manuals should be examined before attempting to install or otherwise connect a number of related subsystems.

During installation, care must be taken to select the correct interconnecting wiring drawing. The choice of an incorrect connection drawing may result in damage to the system and/or one of the components.

Please review the complete model of each item to be connected and locate the appropriate manual(s) and/or drawing(s). Identify all model numbers exactly before making any connections. A number of options and accessories may be added to the main instrument, which are not shown on the basic user wiring. Consult the appropriate option or accessory user manual before connecting it to the system. In many cases, a system wiring drawing is available and may be requested from HOFFER FLOW CONTROLS.

HOFFER FLOW CONTROLS' policy is to make running changes, not model changes, whenever an improvement is possible. This affords our customers the latest in technology and engineering. The information contained in this document is subject to change without notice.

RETURN REQUESTS/INQUIRIES

Direct all warranty and repair requests/inquiries to the Hoffer Flow Controls Customer Service Department, telephone number (252) 331-1997 or 1-800-628-4584. BEFORE RETURNING ANY PRODUCT(S) TO HOFFER FLOW CONTROLS, PURCHASER MUST OBTAIN A RETURNED MATERIAL AUTHORIZATION (RMS) NUMBER FROM HOFFER FLOW CONTROLS' CUSTOMER SERVICE DEPARTMENT (IN ORDER TO AVOID PROCESSING DELAYS). The assigned RMA number should then be marked on the outside of the return package and on any correspondence.

FOR **WARRANTY** RETURNS, please have the following information available BEFORE contacting HOFFER FLOW CONTROLS:

1. P.O. number under which the product was PURCHASED,
2. Model and serial number of the product under warranty, and
3. Repair instructions and/or specific problems relative to the product.

FOR **NON-WARRANTY** REPAIRS OR **CALIBRATIONS**, consult HOFFER FLOW CONTROLS for current repair/calibration charges. Have the following information available BEFORE contacting HOFFER FLOW CONTROLS:

1. P.O. number to cover the COST of the repair/calibration,
2. Model and serial number of the product, and
3. Repair instructions and/or specific problems relative to the product.

LIMITED WARRANTY

HOFFER FLOW CONTROLS, INC. ("HFC") warrants HFC's products ("goods") described in the specifications incorporated in this manual to be free from defects in material and workmanship under normal use and service, but only if such goods have been properly selected for the service intended, properly installed and properly operated and maintained. This warranty shall extend for a period of (1) year from the date of delivery to the original purchaser (or eighteen (18) months if the delivery to the original purchaser occurred outside the continental United States). This warranty is extended only to the original purchaser ("Purchaser"). *Purchaser's sole and exclusive remedy is the repair and/or replacement of nonconforming goods as provided in the following paragraphs.*

In the event Purchaser believes the goods are defective, the goods must be returned to HFC, transportation prepaid by Purchaser, within twelve (12) months after delivery of goods (or eighteen (18) months for goods delivered outside the continental United States) for inspection by HFC. If HFC's inspection determines that the workmanship or materials are defective, the goods will be either repaired or replaced, at HFC's sole determination, free of additional charge, and the goods will be returned, transportation paid by HFC, using the lowest cost transportation available.

Prior to returning the goods to HFC, Purchaser must obtain a Returned Material Authorization (RMA) Number from HFC's Customer Service Department within 30 days after discovery of a purported breach of warranty, but no later than the warranty period; otherwise, such claims shall be deemed waived. See the Return Requests/Inquiries Section of this manual.

If HFC's inspection reveals the goods are free of defects in material and workmanship or such inspection reveals the goods were improperly used, improperly installed, and/or improperly selected for service intended, HFC will notify the purchaser in writing and will deliver the goods back to purchaser upon (i) receipt of Purchaser's written instructions and (ii) the cost of transportation. If Purchaser does not respond within 30 days after notice from HFC, the goods will be disposed of in HFC's discretion.

HFC does not warrant these goods to meet the requirements of any safety code of any state, municipality, or any other jurisdiction, and purchaser assumes all risk and liability whatsoever resulting from the use thereof, whether used singly or in combination with other machines or apparatus.

This warranty shall not apply to any HFC goods or parts thereof, which have bee repaired outside HFC's factory or altered in any way, or have been subject to misuse, negligence, or accident, or have not been operated in accordance with HFC's printed instructions or have been operated under conditions more severe than, or otherwise exceeding, those set forth in the specifications for such goods.

THIS WARRANTY IS EXPRESSLY IN LIEU OF ALL OTHER WARRANTIES, EXPRESSED OR IMPLIED, INCLUDING ANY IMPLIED WARRANTLY OF MERCHANTABILITY OR FITNESS FOR A PARTICULAR PURPOSE. HFC SHALL NOT BE LIABLE FOR ANY LOSS OR DAMAGE RESULTING, DIRECTLY OR INDIRECTLY, FROM THE USE OF LOSS OF USE OF THE GOODS. WITHOUT LIMITING THE GENERALITY OF THE FOREGOING, THIS EXCLUSION FROM LIABILITY EMBRACES THE PURCHASER'S EXPENSES FOR DOWNTIME, DAMAGES FOR WHICH THE PURCHASER MAY BE LIABLE TO OTHER PERSONS, DAMAGES TO PROPERTY, AND INJURY TO OR DEATH OF ANY PERSON. HFC NEITHER ASSUMES NOR AUTHORIZES ANY PERSON TO ASSUME FOR IT ANY OTHER LIABILITY IN CONNECTION WITH THE SALE OR USE OF HFC'S GOODS, AND THERE ARE NO AGREEMENTS OR WARRANTIES COLLATERAL TO OR AFFECTING THE AGREEMENT. PURCHASER'S SOLE AND EXCLUSIVE REMEDY IS THE REPAIR AND/OR REPLACEMENT OF NONCONFORMING GOODS AS PROVIDED IN THE PRECEDING PARAGRAPHS. HFC SHALL NOT BE LIABLE FOR ANY OTHER DAMAGES WHATSOEVER INCLUDING INDIRECT, INCIDENTAL, OR CONSEQUENTIAL DAMAGES.

Table of Contents

List of Figures

List of Tables

1.INTRODUCTION

1.1. INTRODUCTION

The Flowstar series is a cost effective family of flow products designed to accept inputs from pulse producing flowmeters. This manual details instructions on the installation and use of the;

- Model 2002-CNG Onionis (B) - Volumetric flowrate indicator/totalizer for Compressed Natural Gas.

Performance enhancement features such as flowmeter linearization, are available. Such performance enhancement techniques greatly improve the accuracy of the flow measurement system by correcting for known sources of measurement error.

The front membrane panel features a two line 16 character alpha numeric display that indicates function and unit of measure in English or Metric units. The display is a backlit LED type with .32" (8.13 mm) character height. The keypad is a bubble switch membrane type and sealed to NEMA 4X rating.

The unit is factory programmed when purchased with a Hoffer turbine flowmeter. This feature should save the user numerous hours of set up time that is associated with other microprocessor based units available in the marketplace. Programming is done through the front panel keyboard, as well as via a two way RS-232 or RS-422/RS-485(half duplex) multi-drop communication port.

Two analog input channels are available. These two channels are used for temperature and pressure inputs. Two analog output signals are available for transmission of process variables to remote data acquisition systems or chart recorders.

A scaled pulse output is provided for such applications as driving a remote flow totalizer or computer pulse input card. High and low alarms are available in either an open collector pulse form or OPTO-22 rely form.

1.2. PERFORMANCE CHARACTERISTICS

1.2.1. DISPLAY

- Two line, 16 char Alpha numeric, LCD, LED backlit
- Character height 0.32", super-twist +/- 20 degree viewing angle.
- Options: Front display heater, less LED backlight for battery supplied operations

1.2.2. ANNUNCIATORS

- 6 LED indicators for high/low flow, temperature, pressure.
- 1 piezeo electric sonic alarm.

1.2.3. OUTPUTS(4):

Output features are designed to meet as wide a variety of user applications as possible. Each output will be software selectable from a list of available outputs. **All units will come standard with active low NPN open collector outputs.** For applications requiring additional output capabilities, a selection of on board modular relays will be provided for each output.

OPTIONAL OPTO-22 MODULE SELECTION

AC MODULE FEATURES

- Built in LED status indicator.
- Removable fuse.
- VAC optical isolation.
- Withstands one second surge @ 5 amps.
- Current rating of 3 Amps at 45°C.
- Line voltage 24 to 280 Vac.
- Operating temperature: -30 to 70°C.

DRY CONTACT MODULE FEATURES

- VDC/130 VAC switching volts.
- amps switching current.
- amps carry current.
- cycle life.
- VDC isolation voltage.
- Operating temperature: 0 to 70°C.

1.2.4. SOFTWARE SELECTABLE OUTPUT CHOICES (select any 4)

FLOW RELATED

- SCALED PULSE OUT.

ALARM RELATED

- ALARM (High and Low setpoints for process control).

1.2.5. KEYPAD

- 12 key numeric, 8 key mode control keypad, bubble switch membrane.

1.2.6. INPUT

- Single channel, pulse input, 10 mVrms to 5 Vrms, 10 to 1000 Hz, 50 K-ohm input impedance, maximum input frequency is 3500 Hz.
- Quadrature detection, pulse input, 10 mVrms to 5 Vrms, 10 to 1000 Hz, 50 K-ohm input impedance, maximum input frequency is 3500 Hz.
- Optional: MCP pickup.

1.2.7. PROCESS INPUTS(2)

- 1-5Vdc(STD).

- 4-20mA current loop, (Optional).

1.2.8. ANALOG OUTPUTS(2)

- Standard 0-5Vdc.
- 0-10Vdc.
- 4-20mA current loop, meets and exceeds ISA-S50.1 specifications for TYPE 3, Class L and U.

1.2.9. SERIAL COMMUNICATION

- RS-422\RS-485(Half Duplex) multi-drop.
- RS-232C, plug in sockets standard.

1.2.10. DIP SWITCH PROGRAMMABLE FEATURES (7)

- Program Enable.
- Local Control.
- Input Channel 2(Temperature).
- Input Channel 3(Pressure).
- Output Channel 1.
- Output Channel 2.
- Units English, Metric

1.2.11. SELF DIAGNOSTIC

- Unit checks computer hardware for proper operation (RAM, ROM checksum, RTC test only).
- Unit checks for transmitter signal loss and over-range conditions.
- Unit displays OUT OF COMP RANGE when ever the temperature or/and pressure reading(s) exceeds the programmed ranges of the internal density table.

1.2.12. INPUT POWER

- 110/220 VAC 50-60hz selectable on board or 12-24 VDC with external supplied source.

1.2.13. ENVIRONMENTAL

- 0 to 70°C Operating Temperature, -20 to 80°C Storage Temperature.

1.2.14. ENCLOSURE

- DIN Standard 43700, flame retardant, glass filled Noryl case, Dimensions: 7.4 x 3.6 x 7.25.

1.3. ORDERING INFORMATION

ORINIS (B) FLOWSTAR COMPUTER MODEL 2002
MASS TOTALIZER/FLOW RATE COMPUTER FOR GAS/
TEMPERATURE, PRESSURE & ZERO COMPRESSIBILITY COMPENSATED

MODEL 2002 ( ) ( ) ( ) ( ) ( ) ( ) ( ) ( )

TOTAL DISPLAY / 10 DIGIT
RATE DISPLAY / 8 DIGIT

ANALOG OUTPUT / SELECT TWO
(3) 0 - 5 VDC (STANDARD)
(4) 0 - 10 VDC
(7) 4 - 20 mA
(7S) 4 - 12/12 - 20 mA (DUAL UNITS)

COMMUNICATION PORT/ SELECT ONE
(R2) RS-232
(R4) RS-485

SCALED DIGITAL OUTPUTS / SELECT FOUR
/INCLUDES ALARM OPTIONS
(1) OPEN COLLECTOR (STANDARD)
(2) TTL/CMOS
(3) OPTO-22 /SOLID STATE 4-16V

NUMBER OF CHANNELS
(1) SINGLE CHANNEL
*** NOTE: SELECT (1) CHANNEL FROM PULSE INPUT**

PULSE INPUTS / SELECT ONE /ONE FLOWMETER
(M) MAGNETIC COIL (STANDARD PULSE)
(RF) MC3P COIL
(MQ) MAGNETIC QUADRATURE

ANALOG INPUTS (SELECT ONE/ DUAL CHANNEL FLOWMETER INPUT)
(7) 4 - 20 mA (STANDARD)
(7A) 4 - 20 mA CONFIGURED FOR AUTO RANGE CHANGE/
2 CHANNEL

TEMPERATURE COMPENSATION (ANALOG INPUT) (ONE GAS)
(T-) ALL GASES SPECIFY TYPE, USE SCIENTIFIC SYMBOL OF GAS IN MODEL NUMBER. ALL TEMPERATURE OPTIONS REQUIRE A 100 OHM OR 1000 OHM RTD AND 4 - 20 mA TRANSMITTER, SEE SIGNAL CONDITIONER SECTION, PAGE 8 FOR MODEL REQUIRED AND PRICE.

PRESSURE COMPENSATION (ANALOG INPUT) (ONE GAS)
(P-) ALL GASES SPECIFY TYPE, USE SCIENTIFIC SYMBOL OF GAS IN MODEL NUMBER. ALL PRESSURE OPTIONS REQUIRE 4 - 20 mA TRANSMITTER. SEE SIGNAL CONDITIONER SECTION PAGE 20 FOR MODEL REQUIRED AND PRICE.
(Z) ZERO COMPRESSIBILITY (RECOMMENDED FOR HIGH PRESSURE APPLICATIONS)

MODEL 2002 CONTINUED ( ) ( ) ( ) ( )

POWER INPUT

(1) 115 VAC 50/60 HZ
(2) 220 VAC 50/60 HZ
( ) 10.5 TO 24 VDC (INSERT ACTUAL VOLTAGE)
(3) BATTERY/LEAD ACID, 115VAC RECHARGEABLE/12 HRS OPERATION
LIMITED TO OPEN COLLECTOR OUTPUT AND COMMUNICATION OPTIONS **INCLUDES**
DISPLAY NOT BACK LIT, PACKAGED IN PORTABLE CASE WITH FLOWSTAR. **CASE**

ALARMS

(HO/LO)	HIGH/LO	OPEN COLLECTOR
(L)	LOW	OPTO-22 24-240 VAC @ 3 AMPS SPST N/O
(H)	HIGH ALARM	OPTO-22 24-240 VAC @ 3 AMPS SPST N/O
(H/L)	HIGH/LOW ALARM	OPTO-22 24-240 VAC @ 3 AMPS SPST N/O

ENCLOSURE STYLE

(P) PANEL MOUNT COMPLIANCES: SEALED TO NEMA 4X
(NI) FLOWSTAR MOUNTED INTERNALLY AND VISIBLE THROUGH WINDOW COMPLIANCES: NEMA 3, 4X, 12 FIBERGLASS
(ND) FLOWSTAR MOUNTED ON DOOR AND SEALED WITH KEYPAD ACCESSIBLE COMPLIANCES: NEMA 3, 4X, 12 FIBERGLASS
(E) EXPLOSION PROOF COMPLIANCES: NEC CLASS I, GROUPS B, C & D
CLASS II, GROUPS E, F, & G
CLASS III, UL STANDARD 886
CSA STANDARD C22.2 NO. 30 & NEMA 4
(C) PORTABLE (INCLUDES MATING CONNECTORS)

ACCESSORIES/OPTIONS

(F) FLOWMETER MOUNTED FOR (N) & (E) ENCLOSURES ONLY
INCLUDES MOUNTING HUB & FLOWMETER RISER
(H) HEATERS FOR (N) & (E) ENCLOSURES ONLY
(MS) CONNECTORS FOR (N) ENCLOSURE ONLY
INCLUDES MATING CONNECTORS

1.4. WARRANTY

Hoffer Flow Controls warrants that all equipment will be free from defects in workmanship and material provided that such equipment was properly selected for the service intended, properly installed, and not misused. Equipment which is returned transportation prepaid to Hoffer Flow Controls within 12 months after delivery of goods, or 18 months from date of shipment on equipment for destination outside the United States, and is found by Hoffer Flow Controls inspection to be defective in workmanship or material, will be repaired or replaced at Hoffer Flow Controls' sole option, free of charge and returned shipped using the lowest cost transportation prepaid.

In the event of product failure contact Hoffer Flow Controls at 919-331-1997 or 800-628-4584, for issuance of a **Returned Material Authorization (RMA)** number.

1.5. ENCLOSURE DETAIL

Figure 1.1 Standard Panel Mount Enclosure

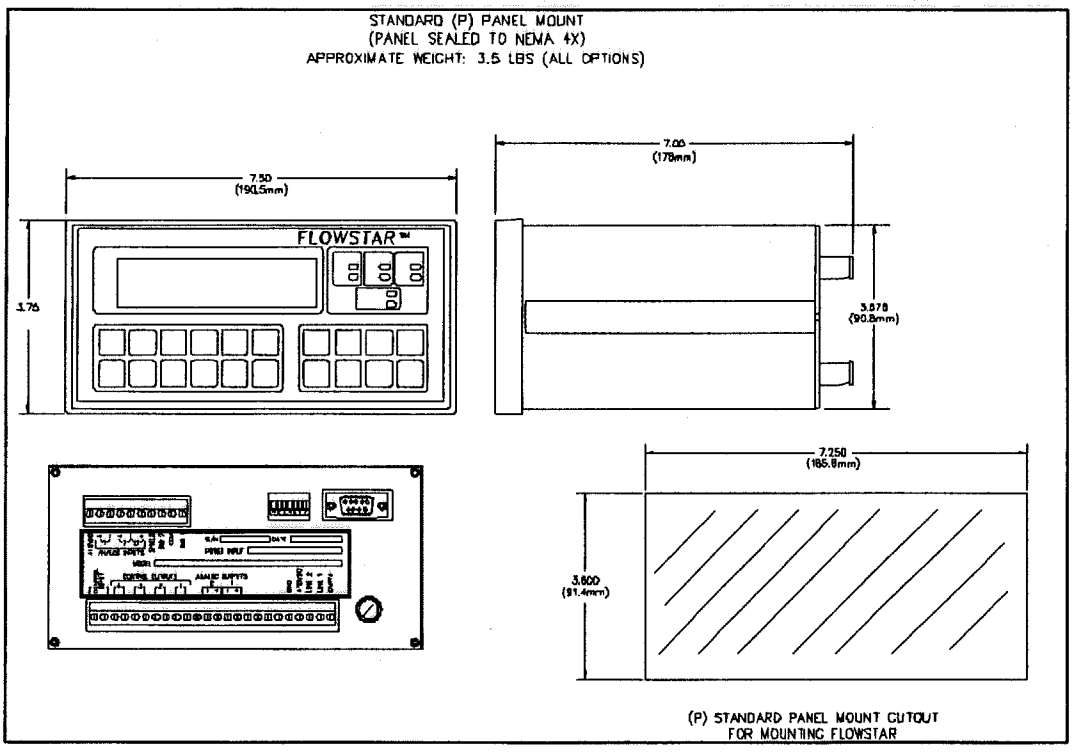

Figure 1.2 NEMA Enclosure

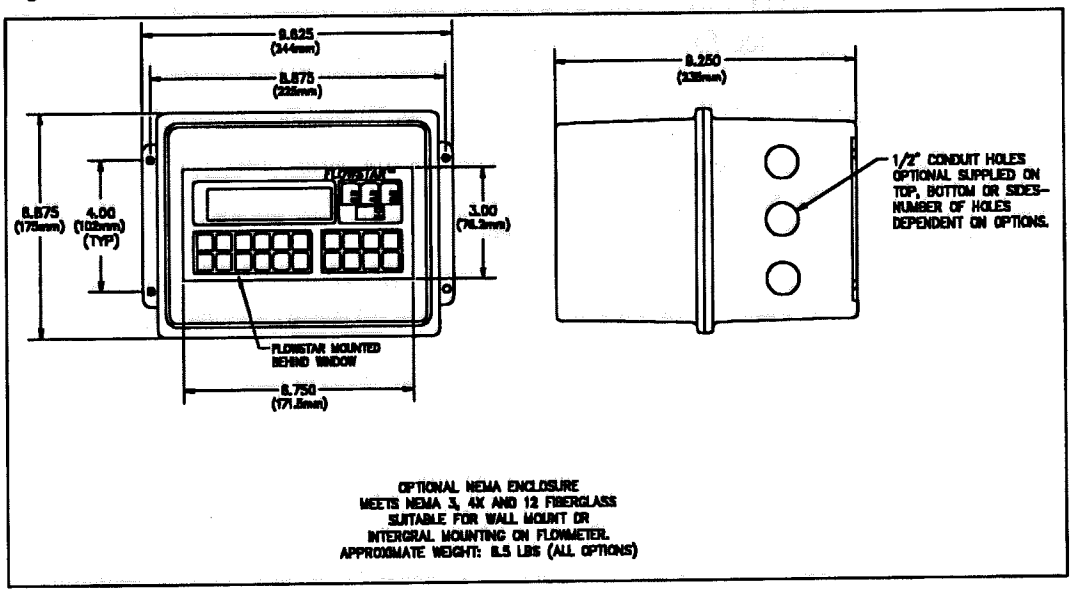

Figure 1.3 Explosion Proof Enclosure

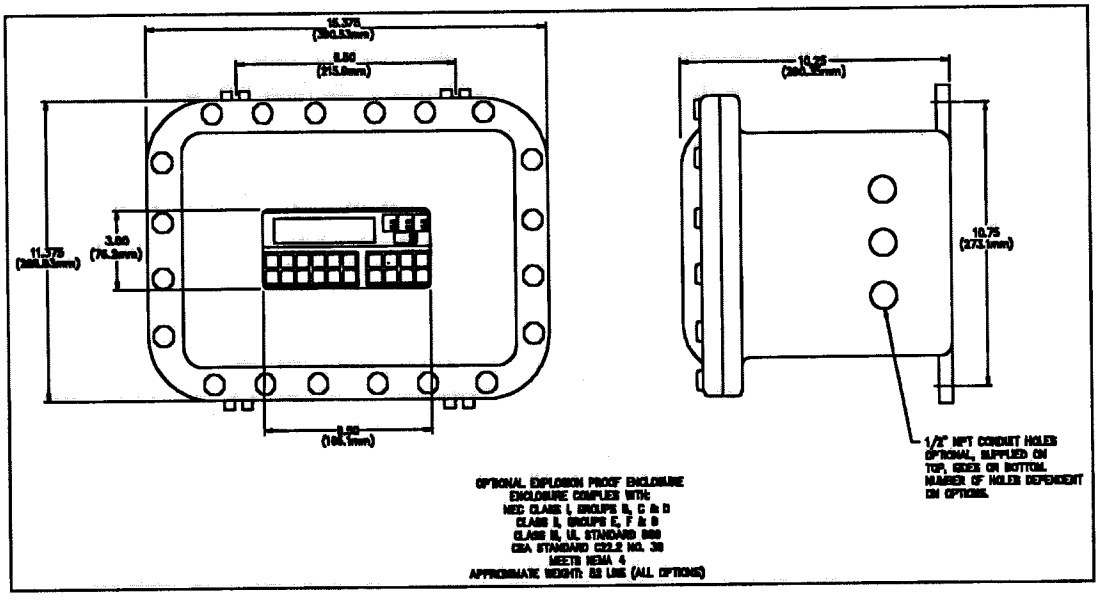

1.6. SHIPPING AND HANDLING

CAUTION - The FLOWSTAR is a static-sensitive devise and standard practice for static sensitive parts should be observed.

In the event of malfunctioning equipment the following guidelines should be observed for the preparation and shipment of the equipment. Failure to do so may result in the material reaching its destination damaged.

The electronic unit due to its **STATIC SENSITIVE** nature should be wrapped in a material conforming to MIL-B-81705 , Type II, and packaged in a heat sealable bag conforming to MIL-P-81997. These steps are necessary to protect the equipment from electrostatic charge(s) that may occur during handling.

The package should then be marked with a sensitive electronic device caution label conforming to MIL-STD-129, Appendix C. The equipment should then be wrapped in cushioning material, and placed into a close fitting box conforming to PPP-B-636 Domestic class.

The exterior shipping container should be marked with a sensitive electronic device caution label conforming to MIL-STD-129, Appendix C.

Clearly mark the factory provided RMA number on all paperwork and shipping packaging.

1.7. ENHANCEMENT FEATURES AND OPTIONS

Many instruments may be used with turbine flowmeters. Few offer the following enhancements for increasing the accuracy of the measurement system.

1.7.1. LINEARIZATION

Many flowmeters are much more repeatable than they are linear. When this is true, as it is in turbine flowmeters, higher measurement accuracy can be achieved by a linearization routine.

Most commonly, higher precision is achieved with the FLOWSTAR by exploiting the repeatability of +/-.05 to +/-.1% over the repeatable flow range. The FLOWSTAR improves linear turbine flow measurement accuracy's to +/-0.1% over 20:1 to 100:1 repeatable flow ranges.

Flowstar can store up to 20 calibration points, for channel 1, and up to 5 points for channels 2 and 3. The unit continuously samples the flowmeter frequency averaged over a programmed period. Stored calibration points are then accessed to determine the closest available calibration information. Using a linear interpolation routine, the actual calibration factor is determined and used in the instrument calculations to achieve the highest possible accuracy.

1.7.2. INSTRUMENT COMMUNICATION OPTIONS

The RS-232 communication port permits many of the desirable, commonly required interface connections to user supplied printers, modems, terminals, and for some computer interfaces. The signals on this port meet or exceed the requirements of RS-232. The 9-pin connector supports the most commonly required handshaking signals. When used with remote computer interface or terminal, the port may be used to request information or to command the Flowstar unit. Most of the capabilities can be controlled from the remote device in a manner similar to the operator panel.

Many requirements arise for the RS422/RS-485(half duplex) communication option. With this port, several instruments may be connected together over greater distances and communicate to a central computer over higher speeds than is possible with the RS-232 communication port. In a multi-drop configuration, the port has a unique feature which permits it to only become active when its corresponding instrument identifier is called.

2.FLOWSTAR OVERVIEW

2.1. INTRODUCTION

The FLOWSTAR 2002-CNG has two modes of operation, the OPERATING and SETUP modes. This OPERATING mode is the mode used during normal operations. The SETUP mode is used to enter in the calibration parameters of the connected flowmeter. The SETUP mode is also used to configure the operation parameters of the Flowstar during factory and on site customization. The SETUP mode is accessed by proper entry of a password.

Operator input to the Flowstar is by an 20 key membrane keypad. The system displays information on a 2 line by 16 character LCD display.

LED indicator lamps and a sonic alarm are provided. Alarm conditions can be accessed through the communications port using the Hoffer Interface.

2.2. HARDWARE CONFIGURATION OF SOFTWARE OPTIONS

Several fields in both the OPERATION and SETUP modes are dependent on the switch setting of S1. This switch is located on the back of the Flowstar. This switch determines which channels are selected and is only used during power up. Changes after power up to the S1 selector switch have no effect on program operation until a subsequent power up. If a channel is not selected, then its OPERATING and SETUP fields will not be displayed.

The S1 switch block is located on the back side of the Flowstar PCB The following table details the operation of the S1 switch block.

Table 1 S1 Switch Functions

S1 SWITCH (read left to right)	*FUNCTION*	
	ON/UP	OFF/DOWN
1	ENGLISH UNITS,	METRIC UNITS
2	ENABLE ANALOG OUTPUT 2(DA2)	INHIBIT ANALOG OUTPUT 2(DA2)
3	ENABLE ANALOG OUTPUT 1(DA1)	INHIBIT ANALOG OUTPUT 2(DA1)
4	ENABLE CHANNEL 3(PRES) INPUT	INHIBIT CHANNEL 3(PRES) INPUT
5	ENABLE CHANNEL 2(TEMP) INPUT	INHIBIT CHANNEL 2(TEMP) INPUT
6	ENABLE LOCAL CONTROL	INHIBIT LOCAL CONTROL
7	PROGRAM ENABLE	PROGRAM LOCKOUT

2.2.1. Switch S1-7

The PROGRAM ENABLE option determines whether the SETUP mode is available. Turning this switch on enables the MODE key. Turning this switch off prevents entry into the SETUP mode and changing of SETUP parameters using the communication interfaces.

2.2.2. Switch S1-6

The switch enables LOCAL CONTROL of the Flowstar. When system is used via communication set this switch off to disable the START, STOP, CLEAR MAN, AUTO, and REM keys.

2.2.3. Switch S1-5,4

These switches enables or disables their respective analog to digital input channels. If an input channel is turned off, none of its respective setup fields will be available in both the OPERATING and SETUP modes.

2.2.4. Switch S1-3,2

These switches enables or disables respective digital to analog output channel. If an output channel is turned off, none of its respective configuration fields will be available in the SETUP mode.

2.2.5. Switch S1-1

This switch when set to ON enables the display of English units. With S1-1 set to OFF, Flowstar will display in Metric units.

3.OPERATING MODE

3.1. INTRODUCTION

The OPERATING mode is where all measured values are displayed. Displaying a measured value is as simple as pressing a key. In this mode continuous monitoring of all channels are performed. The following display fields are available in the operating mode:

- CH1 TOTAL, direct key selectable by pressing TOTAL..
- CH1 RATE, direct key selectable by pressing RATE.
- CH2(TEMP) , direct key selectable by pressing TEMP1.
- DENSITY , direct key selectable by pressing TEMP2.
- CH3(PRES) , direct key selectable by pressing PRES.
- SETPOINT 1, direct key selectable by pressing SETP1.
- SETPOINT 2, direct key selectable by pressing SETP2.
- AUXILIARY 1, direct key selectable by pressing AUX1.
- AUXILIARY 2, direct key selectable by pressing AUX2.
- TIME/, accessible by LAST and NEXT keys only.
- DATE, accessible by LAST and NEXT keys only.
- CH1 ACCUM, accessible by LAST and NEXT key only.
- CH1 DUAL DISPLAY,. direct key selectable by pressing HEAT
- AUDIT TRIAL CAL, accessible by LAST and NEXT key only.
- AUDIT TRIAL CON, accessible by LAST and NEXT key only.

NOTE: CH1 DUAL DISPLAY, display both the flowrate and the total for channel 1.

The actual measured value and units displayed for each channel depends on the individual channels configuration selected in the SETUP mode.

3.2. OPERATING MODE KEYBOARD OPERATION

This section details each keys function and response when pressed in the OPERATING mode.

3.2.1. TOTAL, RATE

Selects the display values for the pulsed flow channel 1. Actual display values are dependent on the SETUP configuration for channel 1.

3.2.2. TEMP2

Select the display value for corrected flowing Density. Actual display values are depended the configuration of Flowstar and setting of switch S1-1.

3.2.3. TEMP1, PRES

Select the display values for input channels 2 and 3 respectively. Actual display values are dependent on the SETUP configurations for each channel.

3.2.4. SETP1, SETP2

If TEMP1, or PRES were the previously selected display fields, then their respective alarm set-points will be displayed, else the Flowstar will display CH1 set-points.

3.2.5. CLEAR

The CLEAR key resets channel 1 total to zero unless Ch1 Accum Total is display, then the key will clear CH1 ACCUM TOTAL. Also clears any AUX channel that is configured for total unless CH1 ACCUM TOTAL is displayed.

3.2.6. LAST, NEXT

These keys allow the operator to scroll through the display fields individually. In addition to the key selected fields, there are several miscellaneous fields which can only be viewed by scrolling past the original fields. I.E. TIME, DATE, CH1,

3.2.7. SEL

This key acknowledges an alarm condition. It sets blinking LED's to solid. It will also silence the sonic alarm.

3.2.8. REM

Pressing this key will generate a ticket, when FS-2002-CNG unit is configure for printing and a printer is attached.

3.2.9. MODE

Prompts you for a password. This occurs only if the S1-7 switch is set to ON position during power up. Password entry is facilitated by using the numeric keys. Entry of a proper password will shift the unit into the SETUP mode. Pressing the MODE key while in the SETUP mode will cause the Flowstar unit to switch to the OPERATING mode.

3.3. OPERATING MODE LED AND SONIC ALARM OPERATIONS

During normal operating conditions in which none of the alarm conditions are met, the LED's and SONIC ALARM are in the off state. If an alarm condition is met, then the associated LED will blink and the sonic alarm will sound. This is considered an alarming condition.

To silence the alarm, the SEL key must be pressed. This will cause the sonic alarm to be silenced and the LED will stop blinking and remain in the on condition. This will indicate that an alarming condition is met and that it has been acknowledged. This is the alarm acknowledged state.

If the alarm condition subsides, the LED and sonic alarm(if still on) will deenergize. This is the cleared state. If another alarm condition is met then the same sequence of events will occur. The steady LED on state of a previously acknowledged alarm will remain the same. The alarm conditions are fully configurable in the SETUP mode. When in the SETUP mode all alarm conditions are held in the cleared state

3.4. ERROR MESSAGES

During normal operation the Flowstar 2002-CNG displays various error messages depending on current operating conditions. The error messages are described below:

3.4.1. TEMPERATURE XTMR OVER RANGE

Temperature transmitter Over Range is flashed when ever the Temperature input(ch2) exceeds the maximum allowable input value. The maximum allowable input value depends on the hardware selected and can be 5 vdc, 10 vdc or 20 mA. When Temperature Over Range failure occurs, the system will use the Default Temperature for compensation.

3.4.2. TEMPERATURE SIGNAL LOSS

Temperature Signal Loss is flashed whenever the transmitter output falls below the minimum allowable input or the wiring to the transmitter fails(shorts or open circuit). The minimum allowable input value depends on the hardware selected and can be 0 vdc or 4 mA. When Temperature Signal Loss occurs the system will use the Default Temperature for compensation.

3.4.3. PRESSURE XTMR OVER RANGE

Pressure transmitter Over Range is flashed when ever the Pressure input(ch3) exceeds the maximum allowable input value. The maximum allowable input value depends on the hardware selected and can be 5 vdc, 10 vdc or 20 mA. When Pressure Xtmr Over Range failure occurs, the system will use the Default Pressure for compensation.

3.4.4. PRESSURE SIGNAL LOSS

Pressure Signal Loss is flashed whenever the pressure transmitter output falls below the minimum allowable input or the wiring to the transmitter fails(shorts or open circuit). The minimum allowable input value depends on the hardware selected and can be 0 vdc or 4 mA. When Pressure Signal Loss occurs the system will use the Default Pressure for compensation.

3.4.5. COMP RANGE OUT

This error message is displayed whenever process input variables(temperature and pressure) exceeds the programmed temperature and pressure ranges of the internal density table.

3.4.6. PRINTER IS OFF LINE

Printer is Off Line is displayed whenever a connected printer is "Out of Paper" or is "Off Line." If a printer does not support "Paper Out" detection, then Flowstar will not be able to detect a Paper Out error. Check you printer documentation. Hoffer Flow Controls sells a special cable for connecting a serial printer to the Flowstar.

In order for a serial printer to be used with the Flowstar, it must support the ASCII(IBM) character table and be RS232C compatible.

3.4.7. STOP FLOW

If an attempt is made to print a ticket when the Flowstar is configured for a printer and flow is present, then "Stop Flow" error message will be flashed.

4.SETUP MODE OPERATIONS

4.1. INTRODUCTION

After the MODE key is pressed in the OPERATING mode, a password entry screen is displayed. Enter the proper password and press the MODE key, the Flowstar will enter the SETUP mode. After configuration and calibration parameters have been entered or viewed, press the MODE key once more to return to the OPERATING mode. If the SETUP mode is entered, the last item selected will be displayed again. The default password is 2001.

4.2. KEYBOARD OPERATION

The Flowstar 2002-CNG uses an alternate key functionality when in the SETUP modes.

4.2.1. 2, 3, 4, 5, 6, 7, 8, 9 and 0

These keys facilitate numeric entry in selected SETUP fields.

4.2.2. SEL, REM

Changes a selected SETUP fields discrete selection.

4.2.3. LAST, NEXT

Scrolls forward and backwards through the SETUP fields.

4.2.4. STOP

Changes the sign of temperature related settings(i.e. Default Temperature, CH2 MPs, etc.).

4.2.5. MAN, and AUTO

Perform no functions in this mode, except where noted.

4.2.6. MODE

When pressed causes the program to exit the SETUP mode. Any altered values are stored in non volatile memory(EEPROM).

4.3. SETUP MODE FIELD DESCRIPTIONS

Many of the field selections in the SETUP modes are optional and are dependent on the S1 setup switch. If the specific channel selector switch is not enabled then all of the configuration/calibration fields for that channel will not be displayed.

4.3.1. CH1 TOT CONFIG

This field is used to assign display measured values in the TOTAL display for the pulsed flow input channel. The following units and options are available.

Table 2 CH1 Total units

English Units	*Metric Units*
GGE	GLE
LBS	KG
ACF	AM3
OZ	GRAMS
TONS	MTON

CH1 RATE CONFIG:

This field is used to assign display measured values in the RATE display based off the pulsed flow input channel. The following units and options are available.

Table 3 CH1 Rate units

English Units	*Metric Units*
GGE/MIN	GLE/MIN
GGE/HR	GLE/HR
GGE/SEC	GLE/SEC
LBS/MIN	KG/MIN
LBS/HR	KG/HR
LBS/SEC	KG/SEC
ACF/MIN	AM3/MIN
ACF/HR	AM3/HR
ACF/SEC	AM3/SEC
OZ/MIN	G/MIN
OZ/HR	G/HR
OZ/SEC	G/SEC
TON/MIN	MTON/MIN
TON/HR	MTON/HR
TON/SEC	MTON/SEC

4.3.2. TEMP UNITS

This selection determines the units of temperature used to enter all temperature related calibration information. The Flowstar uses DEG K as its base temperature unit. All temperature entries are converted to the base unit for storage. The Flowstar uses the base temperature unit to perform all temperature related calculation. The base unit values are converted back to the selected unit for display and communication accesses Select from the following.

- DEG K
- DEG F
- DEG C
- DEG R

4.3.3. PRESSURE UNITS

This selection determines the units of pressure used to enter all pressure related calibration information. The Flowstar uses PSIA as its base pressure unit. All pressure entries are converted to the base unit for storage. The Flowstar uses the base pressure unit to perform all pressure related calculations. The base unit values are converted back to the selected unit for display and communication accesses. Select from the following.

- PSIA
- PSIG
- ATM
- BAR-A
- BAR-G
- KPAS-A
- KPAS-G

4.3.4. CH1 DATA ATIME

Channel 1 Data Average Time is the amount of time that the displayed rate indication is averaged. A value of 0.3 second will mean that no data averaging will occur. Enter a numeric value from 0.3 to 10.0 seconds. The default value for CH1 DATA ATIME is 1.0 seconds.

4.3.5. CH1 POINT NUMBER

This integer field is the number of points used in a linearization lookup table. Allowed values are from 0 to 20. Default value is 20.

4.3.6. C1 PULSE WEIGHT

Enter a value which corresponds to the pulses per unit of measure selected on the channels display field. For example, 1.00 will represent 1 pulse/unit, 10 will equal 10 pulses/unit, and 0.1 will equal 1 pulse per 10 units. Default value is 1.00. This setting is only valid when RELAY X CONFIG(where X can be 1 or 2) is set to CH1 SCALED PULSE.

4.3.7. FLOW CALC METHOD

Select from the following based on the type of measurement calculation desired.

- SINGLE KFACTOR, uses DEF k.
- KFACTOR
- FWD REV KFACTOR

4.3.8. DEF TEMP

This is the temperature used to provide compensation when channel 2 fails or is turned off. The unit used for Default Temperature is depended on the setting of TEMPERATURE UNIT. Default value is 70 deg. F(294.2611 deg. K)

4.3.9. DEF PRES

This is the pressure used to compensate liquid to conditions when channel 3 fails or is turned off. The unit used for Default Pressure is depended on the setting of PRESSURE UNIT. Default value is 1000 PSIA.

4.3.10. DEF K P/ACF or P/AM3

This is the default K Factor which will be used when the FLOW CALC METHOD is set to SINGLE KFACTOR. Units are depended on the setting of switch S1-1. Default value is 150 P/ACF.

4.3.11. FREQ HZ 1-20 or FWD FREQ 1-20

FWD FREQUENCY 1 through 20 are the forward flow, flowmeter characteristics used for the flow input channel when the KFACTOR or FWD REV KFACTOR method is selected for the FLOW CALC METHOD. Enter in a floating point value.

4.3.12. KFAC P/ACF or KFAC P/AM3 1-20 or FWD KFAC P/FT3 1-20 or FWD KFAC P/AM3 1-20

FWD K FACTOR 1 through 20 are the forward flow, flowmeter characteristics used for the flow input channel when the KFACTOR or FWD REV KFACTOR method is selected for the FLOW CALC METHOD. Enter in a floating point value. Units are depended on the setting of switch S1-1.

4.3.13. REV FREQ HZ 1-20

REV FREQUENCY 1 through 20 are the reverse flow, flowmeter characteristics used for the flow input channel when the FWD REV KFACTOR method is selected for the FLOW CALC METHOD. Enter in a floating point value.

4.3.14. REV KFAC P/ACF or P/AM3 1-20

REV K FACTOR 1 through 20 are the reverse flow, flowmeter characteristics used for the flow input channel when the FWD REV KFACTOR method is selected for the FLOW CALC METHOD. Enter in a floating point value. Units are depended on the setting of switch S1-1.

4.3.15. ATD DATA ATIME:

ATD Data Averaging Time is the amount of time that the displayed values for Temperature and Pressure are averaged Enter a numeric value from 0.1 to 10.0 seconds. The default value for ATD DATA ATIME is 5.0 seconds. A setting of 0.1 second means that no data averaging will occur.

NOTE: If channel 2 is disabled by S1-5 being turned OFF, then all of the channel 2 settings will not be displayed.

4.3.16. CH2 POINT NUMBER

This integer field determines how many points will be used in the linearization lookup table. Allowed values are from 2 to 5. Default value is 2.

4.3.17. CH2 LOW CAL

This field is used to calibrate the channels low end. Set the channels input to its lowest value(1 volt or 4 mA) and press the SEL key. This locks in the low point corresponding to the lowest selected table entry.

4.3.18. CH2 HIGH CAL

This field is used to calibrate the channels high end. Set the channels input to its highest value(5 volt or 20 mA) and press the SEL key. This locks in the high point corresponding to the highest selected table entry.

4.3.19. CH2 MP UNIT 1-5

These values are used to determine the measured value used in channel 2. The units used to program CH2 MEASUREMENT POINT are determined by the setting of Temperature Units. For proper operation 2 measurement points must be entered.

NOTE: If channel 3 is disabled by S1-4 being turned OFF, then all of the channel 3 settings will not be displayed.

4.3.20. CH3 POINT NUMBER

This integer field determines how many points will be used in the linearization lookup table. Allowed values are from 2 to 5. Default value is 2.

4.3.21. CH3 LOW CAL

This field is used to calibrate the channels low end. Set the channels input to its lowest value(1 volt or 4mA) and press the SEL key. This locks in the low point corresponding to the lowest selected table entry.

4.3.22. CH3 HIGH CAL

This field is used to calibrate the channels high end. Set the channels input to its highest value(5 volts or 20 mA) and press the SEL key. This locks in the high point corresponding to the highest selected table entry.

4.3.23. CH3 MP UNIT 1-5

These values are used to determine the measured value used in channel 3. The units used to program CH3 Measurement Points are determine by the setting of Pressure Units.

4.3.24. AUX 1 UNITS AND AUX 2 UNITS

This selection set the units to be used when the AUX 1 or AUX 2 key is depressed in the OPERATING mode. Select a unit from one of the following three tables.

Table 4 Total Units available on the Auxiliary displays.

English Units	*Metric Units*
GGE	GLE
LBS	KG
ACF	AM3
OZ	GRAMS
TONS	MTON

Table 5 Rate Units available on the Auxiliary displays

English Units	*Metric Units*
GGE/MIN	GLE/MIN
GGE/HR	GLE/HR
GGE/SEC	GLE/SEC
LBS/MIN	KG/MIN
LBS/HR	KG/HR
LBS/SEC	KG/SEC
ACF/MIN	AM3/MIN
ACF/HR	AM3/HR
ACF/SEC	AM3/SEC
OZ/MIN	G/MIN
OZ/HR	G/HR
OZ/SEC	G/SEC
TON/MIN	MTON/MIN
TON/HR	MTON/HR
TON/SEC	MTON/SEC

Table 6Conversion Units available on the Auxiliary displays.

English Units	*Metric Units*
GLE	GGE
KG	LBS
AM3	ACF
GLE/MIN	GGE/MIN
KG/MIN	LBS/MIN
AM3/MIN	ACF/MIN

4.3.25. ALM1 S-H RATE UNIT

This field sets the high alarm set-points for channel 1. If a high alarm is not desired set it to a known condition well above the operating range of the measured value. Enter a floating point number. Default is 100.00.

4.3.26. ALM1 S-L RATE UNIT

This field sets the low alarm set-points for channel 1. Enter a floating point number. Default is 0.00.

4.3.27. ALM1 DBA RATE UNIT

This field sets the deadband for alarms. Once the alarm set-points is reached, the alarm will be locked in. For high alarms, the measured values must fall below the high alarm set-points minus the deadband value. For low alarms, the measured values must rise above the low alarm set-points plus the deadband value. The deadband reduces spurious alarms when close to the set points.

NOTE: if the CH1 RATE CONFIG unit is changed after Alarm 1 setting are programmed then the Alarm 1 settings must be reprogrammed.

4.3.28. ALARM 1 AUDIBLE

This selects the conditions for the audible sonic alarm. Select from the following.

- OFF
- HIGH ONLY
- LOW ONLY
- HIGH AND LOW

NOTE: If channel 2 is disabled by S1-5 being turned OFF, then all of the channel 2 settings will not be displayed.

4.3.29. ALM2 S-HI TEMP UNIT

This field sets the high alarm set-points for channel 2. If a high alarm is not desired set it to a known condition well above the operating range of the measured value. Enter a floating point number. Default is 100.00.

4.3.30. ALM2 S-LO TEMP UNIT

This field sets the low alarm set-points for channel 2. Enter a floating point number. Default is 0.00.

4.3.31. ALM2 DBAN TEMP UNIT

This field sets the deadband for alarms. Once the alarm set-points is reached, the alarm will be locked in. For high alarms, the measured values must fall below the high alarm set-points minus the deadband value. For low alarms, the measured values must rise above the low alarm set-points plus the deadband value. The deadband reduces spurious alarms when close to the set points.

4.3.32. ALARM 2 AUDIBLE

This selects the conditions for the audible sonic alarm. Select from the following.

- OFF
- HIGH ONLY
- LOW ONLY
- HIGH AND LOW

NOTE: If channel 3 is disabled by S1-4 being turned OFF, then all of the channel 3 settings will not be displayed.

4.3.33. ALM3 S-HI PRES UNIT

This field sets the high alarm set-points for channel 3. If a high alarm is not desired set it to a known condition well above the operating range of the measured value. Enter a floating point number. Default is 100.00.

4.3.34. ALM3 S-LO PRES UNIT

This field sets the low alarm set-points for channel 3. Enter a floating point number. Default is 0.00.

4.3.35. ALM3 DBAN PRES UNIT

This field sets the deadband for alarms. Once the alarm set-points is reached, the alarm will be locked in. For high alarms, the measured values must fall below the high alarm set-points minus the deadband value. For low alarms, the measured values must rise above the low alarm set-points plus the deadband value. The deadband reduces spurious alarms when close to the set points.

4.3.36. ALARM 3 AUDIBLE

This selects the conditions for the audible sonic alarm. Select from the following.

- OFF
- HIGH ONLY
- LOW ONLY
- HIGH AND LOW

NOTE: If S1-3 is set to off, then the settings for Digital to Analog Channel 1 will not be displayed.

4.3.37. DA1 CONFIG

This field selects the mode of operation for the digital to analog output 1. Select from the following. If S1-3 is set to off, then 4.2.34 and 4.2.35 will not be displayed.

- MIMIC CH1: used to configure the analog output to mimic CH1 rate.
- MIMIC CH2: used to configure the analog output to mimic CH2 temperature.
- MIMIC CH3: used to configure the analog output to mimic CH3 pressure.
- MIMIC CH1 FWD/REV: used to configure the analog output for split 4-20 ma/1-5 volt output corresponding to channel 1 flowrate.

4.3.38. DA1 MIN UNIT

Enter a floating value that corresponds to the minimum value expected on the selected mimic channel. This value will correlate to 0 volts, or 4 mA output depending on the hardware selected. The units are determine by the selected mimic channel's unit.

4.3.39. DA1 MAX UNIT

Enter a floating value that corresponds to the maximum value expected on the selected mimic channel. This value will correlate to 5 volts, 10 volts, or 20 mA output depending on the hardware selected. Unit is determine by the mimic channel's selected unit.

NOTE: If S1-2 is set to off, then the settings for Digital to Analog Channel 2 will not be displayed.

4.3.40. DA2 CONFIG

This field select the mode of operation for the digital to analog output 2. Select from the following. If S1-2 is set to off, then 4.2.34 and 4.2.35 will not be displayed.

- MIMIC CH1: used to configure the analog output to mimic CH1 rate.
- MIMIC CH2: used to configure the analog output to mimic CH2 temperature.
- MIMIC CH3: used to configure the analog output to mimic CH3 pressure.
- MIMIC CH1 FWD/REV: used to configure the analog output for spilt 4-20 ma/1-5 volt output corresponding to channel 1 flowrate.

4.3.41. DA2 MIN UNIT

Enter a floating value that corresponds to the maximum value expected on the selected mimic channel. This value will correlate to 0 volts, or 4 mA output depending on the hardware selected. Unit is determine by the mimic channel's selected unit.

4.3.42. DA2 MAX UNIT

Enter a floating value that corresponds to the maximum value expected on the selected mimic channel. This value will correlate to 5 volts, 10 volts, or 20 mA output depending on the hardware selected. Unit is determine by the mimic channel's selected unit.

NOTE: If an analog output channel is configured to mimic CH1 RATE and CH1 RATE CONFIG is changed after programming of the DA output, then the DA output channel must be reprogrammed.

4.3.43. RELAY 1 - 2 CONFIG

Each relay can have the following selections for the value to be sensed:

- ALARM HIGH FLOW RATE
- ALARM1 LOW FLOW RATE
- ALARM2 TEMP OVER RANGE
- ALARM2 LOW TEMP
- ALARM3 PRES OVER RANGE
- ALARM3 LOW PRES
- ALARM AUDIBLE This will occur based on the conditions that the audible alarm are set to.
- FWD SCALED PULSE, select this item if a forward scaled pulsed output is desired.
- REV SCALED PULSE, select this item if a reverse scaled pulsed output is desired.

4.3.44. RELAY 3 - 4 CONFIG

Each relay can have the following selections for the value to be sensed:

- ALARM HIGH FLOW RATE
- ALARM1 LOW FLOW RATE
- ALARM2 TEMP OVER RANGE
- ALARM2 LOW TEMP
- ALARM3 PRES OVER RANGE
- ALARM3 LOW PRES
- ALARM AUDIBLE This will occur based on the conditions that the audible alarm are set to.

4.3.45. SERIAL MODE

Select the serial communications mode from the following.

- RS232
- RS422
- RS485

4.3.46. RS-485 NODE NUM

RS-485 multi-drop communications requires a unique identifier for the unit. Enter in an integer for this field in the range of 0 to 31.

4.3.47. BAUD RATE

Select one of the following to determine the serial baud rate.

- 9600
- 4800
- 2400
- 1200
- 600
- 300
- 150
- 75

4.3.48. HANDSHAKE

Select one of the following to set the serial handshake method.

- NONE
- HARDWARE DTR
- XON/XOFF

4.3.49. SERIAL PROTOCOL

Determine the communication mode based on the hardware. Select one of the following.

- REMOTE KEYBOARD
- HFC-6 INTERFACE
- PRINTER 2010
- PRINTER

4.3.50. PASSWORD

This field allows the password to be changed from the factory default of 2001.

4.3.51. DATE

Enter the date using the numeric keys.

4.3.52. DAY OF THE WEEK

Select from one of the following fields.

- MON
- TUE
- WED
- THU
- FRI
- SAT
- SUN

4.3.53. TIME 24-HOUR CLK

Set the time of day in 24 hour mode.

4.3.54. RESTORE NEW UNIT

NOTE: Complete calibration is loss if Flowstar is restored.

To restore the unit to factory defaults, perform the following steps:

1. Press the SEL key, the unit will display PASSWORD entry field.
2. Enter password.
3. Press MODE key, if correct password is entered then the unit will display RESTORING TO FACTORY DEFAULTS. If the incorrect password is entered, then display will return to RESTORE NEW UNIT.

5.INSTALLATION

5.1. INSTALLATION WIRING LAYOUT FOR INTERCONNECTIONS

In considering the interconnections between the flowmeter and the flow measurement system, some attention must be given to anticipated noise sources and to the coupling of these noise sources to the interconnecting wiring.

Noise signals may be coupled inductively or capacitively into the wiring between the sensor and the electronic measuring systems. In general, utilizing a shielded, twisted pair for the interconnection greatly reduces this coupling. The shield should be grounded on one end of the cable only. In general, grounding only on the electronic measuring system is best.

However, even with proper interconnecting cabling cross talk with other signal lines or power lines may still occur and should be avoided. Physical isolation of the wiring reduces the chance of potential problems.

5.2. INSTALLATION OF THE FLOWSTAR

FLOWSTAR should be placed in a convenient location, which maintains access to the unit should repairs or readjustment be required.

Refer to following installation diagrams for proper connections of input power, process sensors, process output and control outputs.

Figure 5.1 RS-232/RS-422/RS-485 Wiring Detail

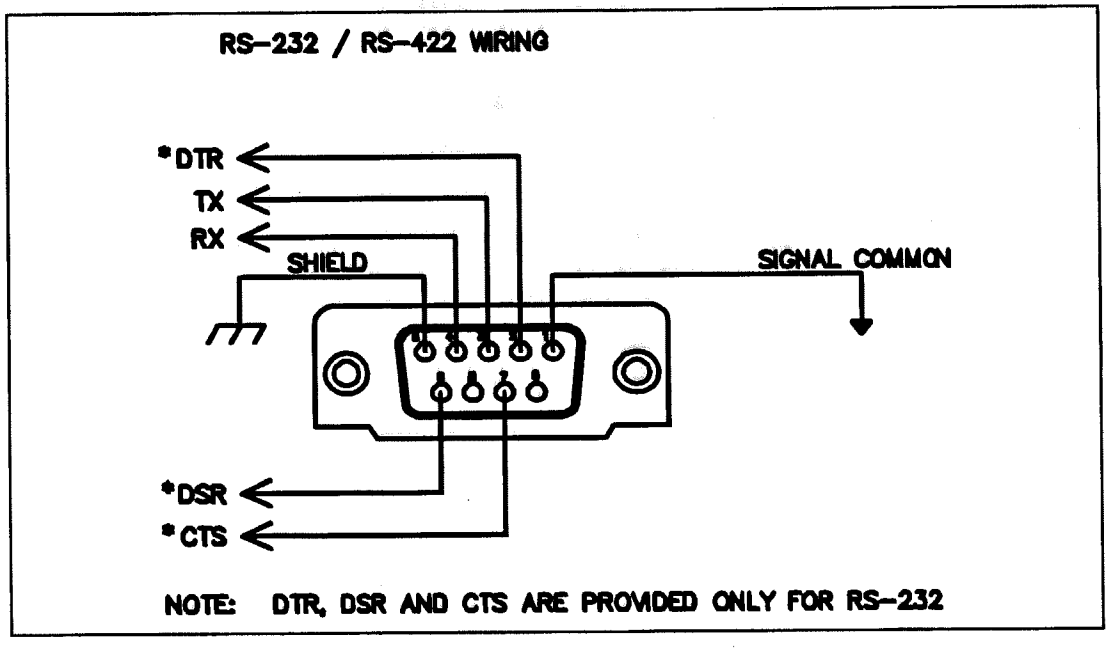

Figure 5.2 AC Power Input

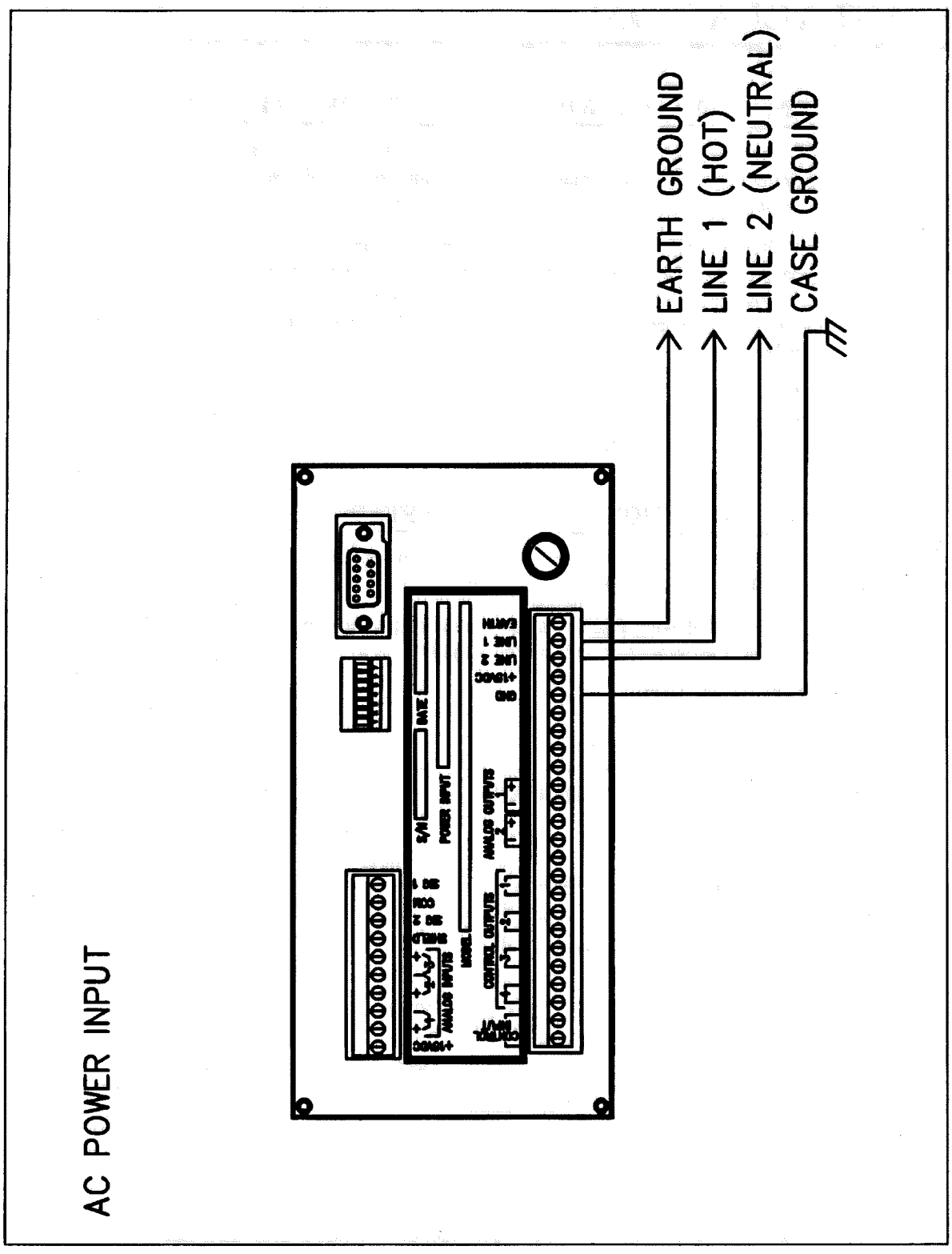

Figure 5.3 DC Power Input

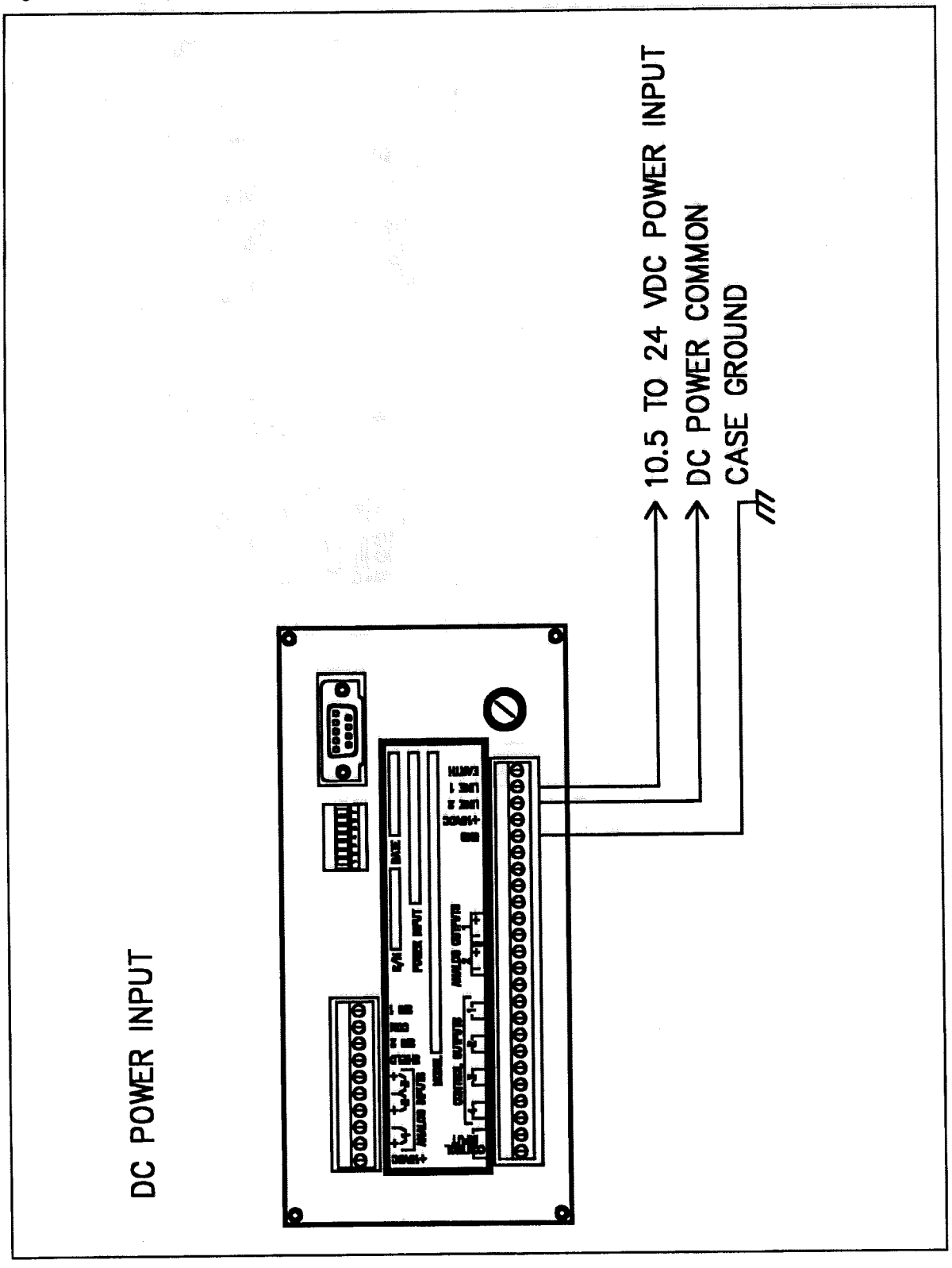

Figure 5.4 Single Magnetic Pickup Input

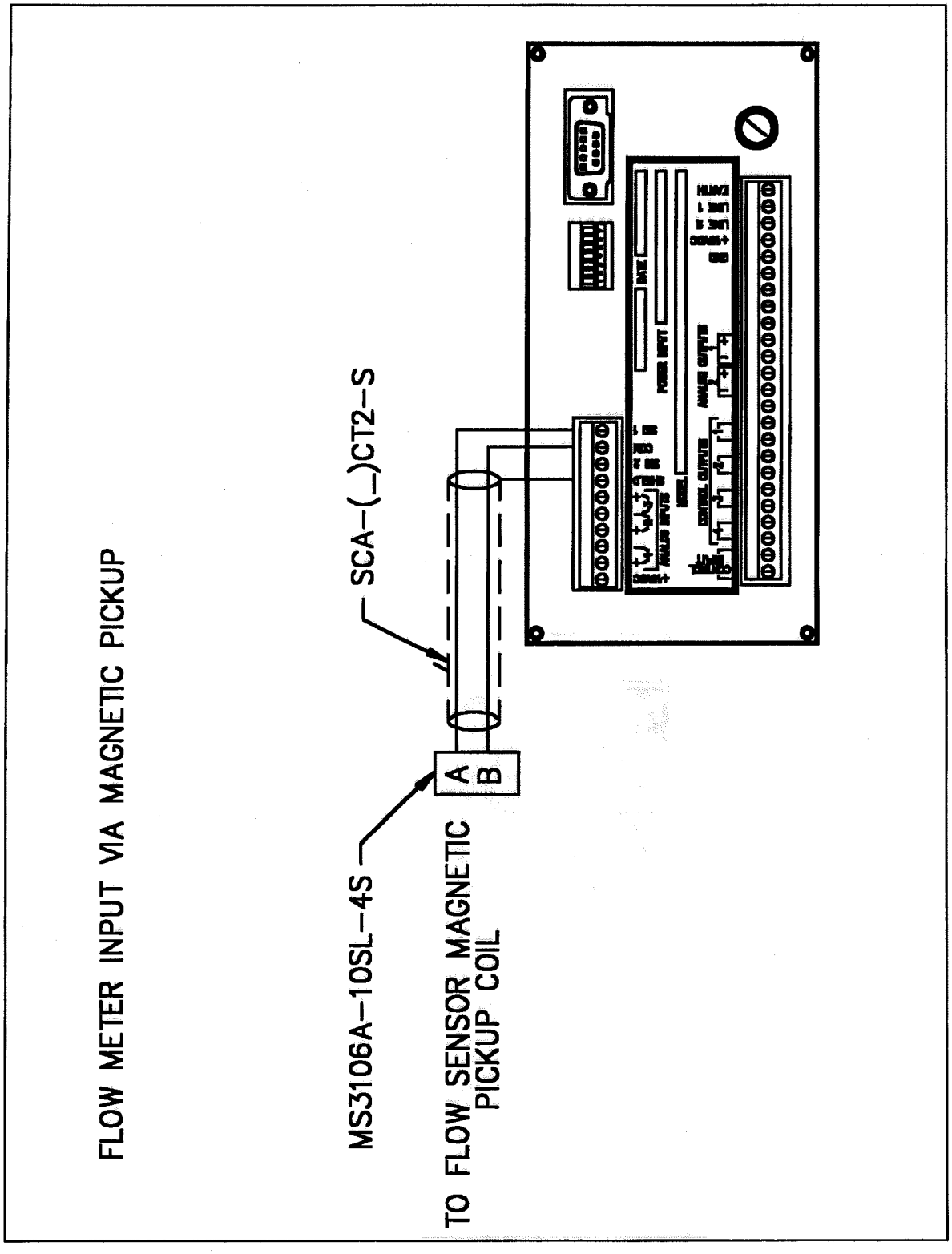

Figure 5.5 Quadrature Magnetic Pickup Input

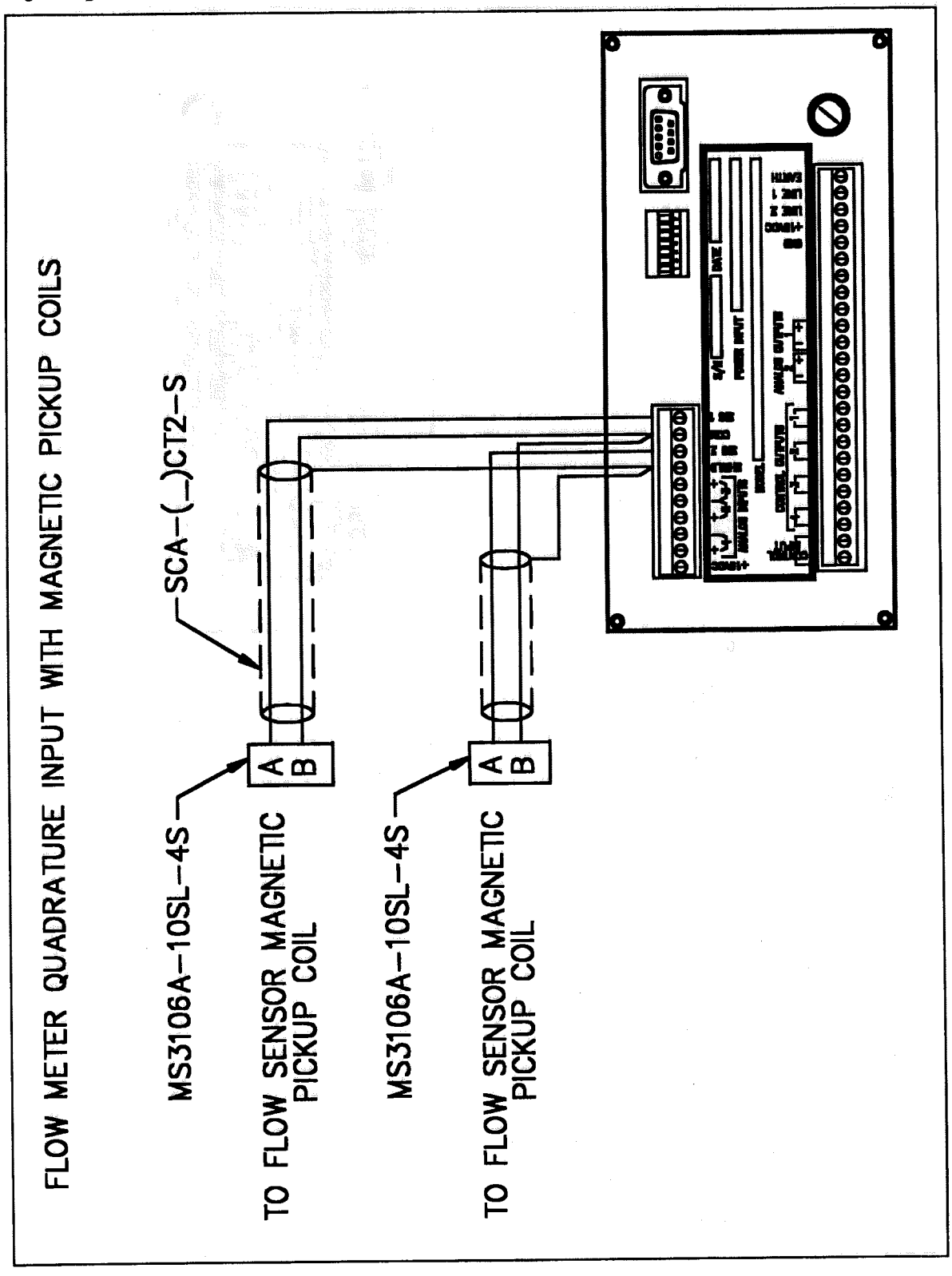

Figure 5.6 MCP Pickup Coil Input

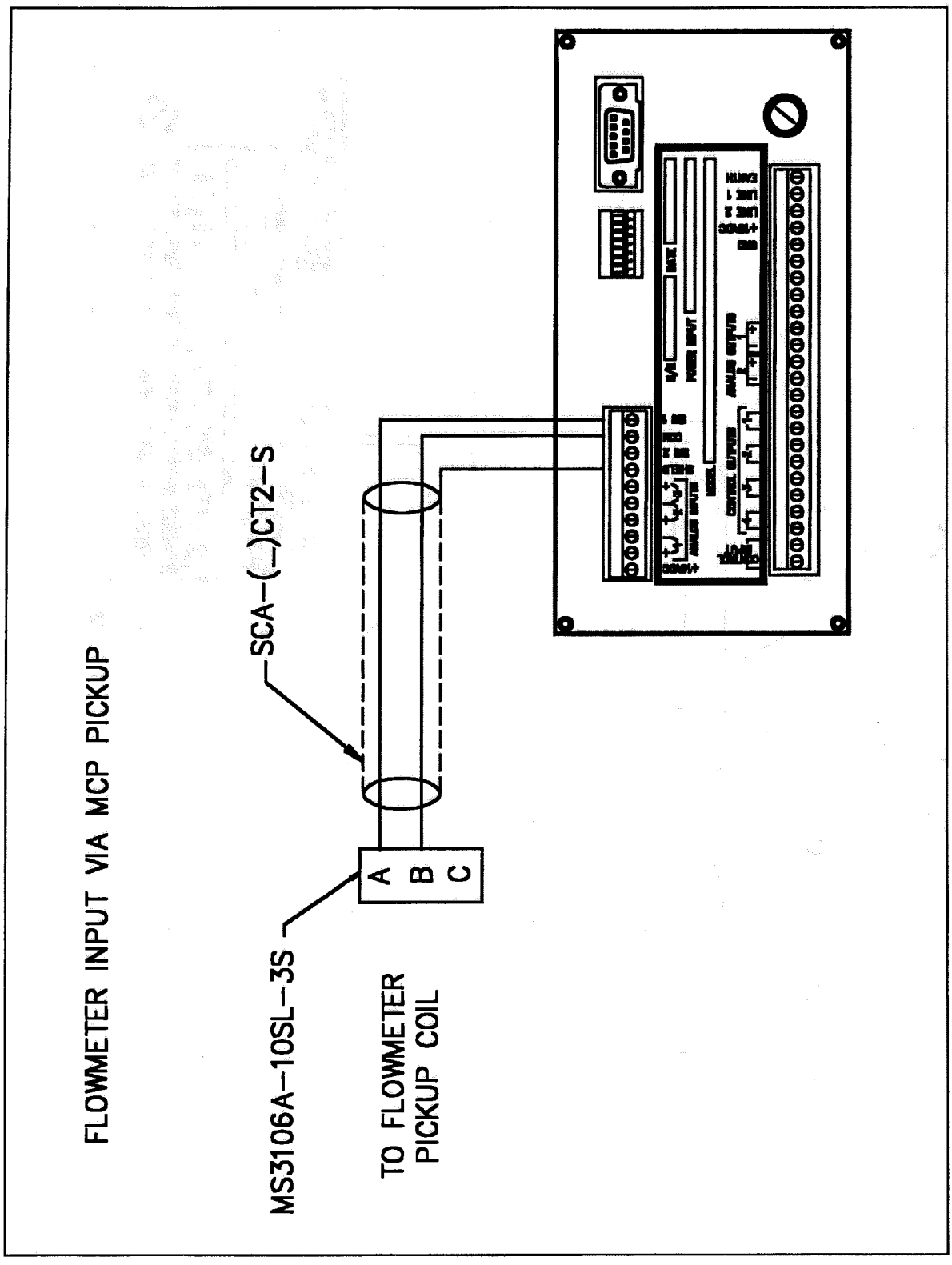

Figure 5.7 Remote Signal Conditioner Interface

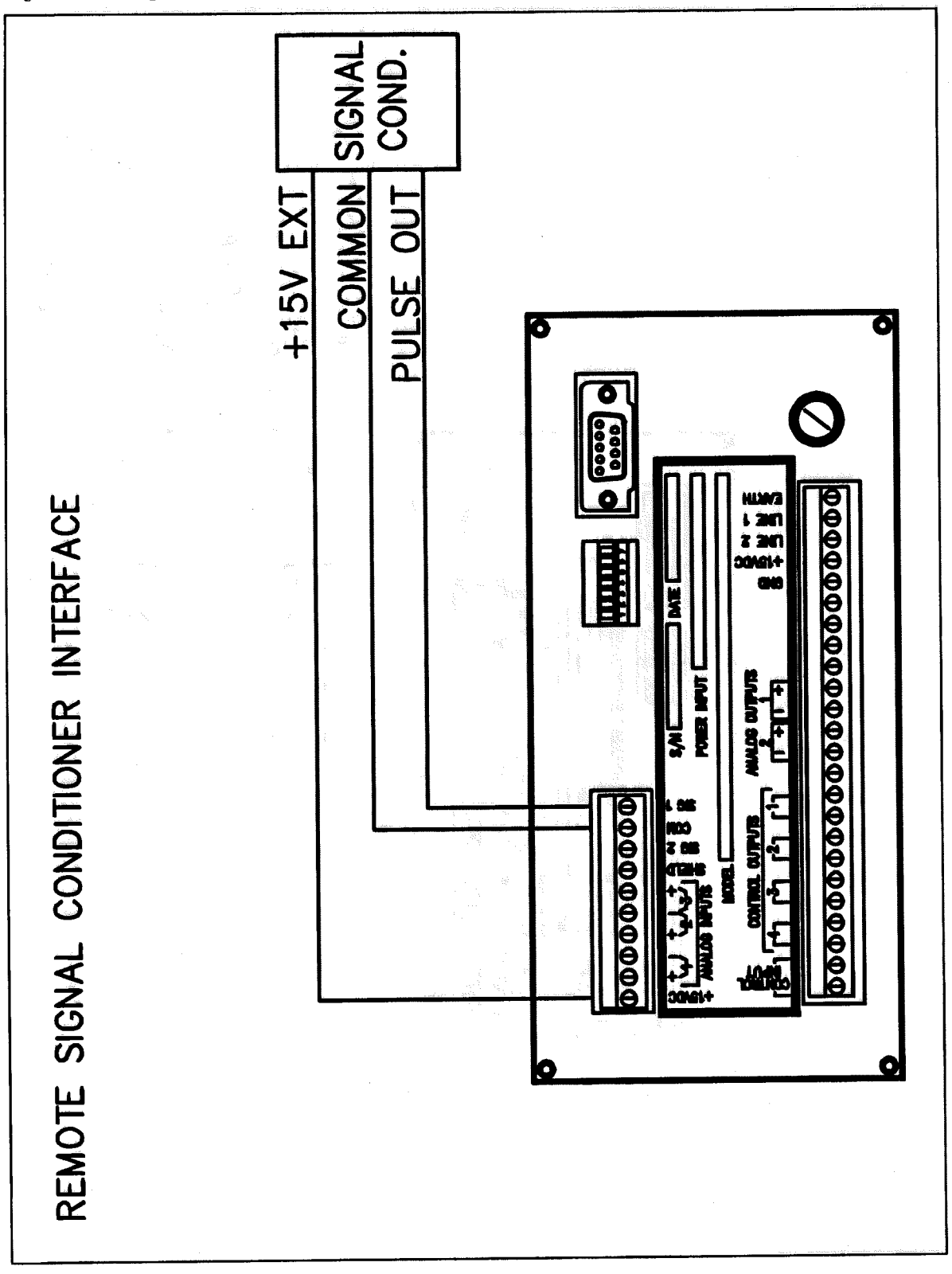

Figure 5.8 Analog Output Connections

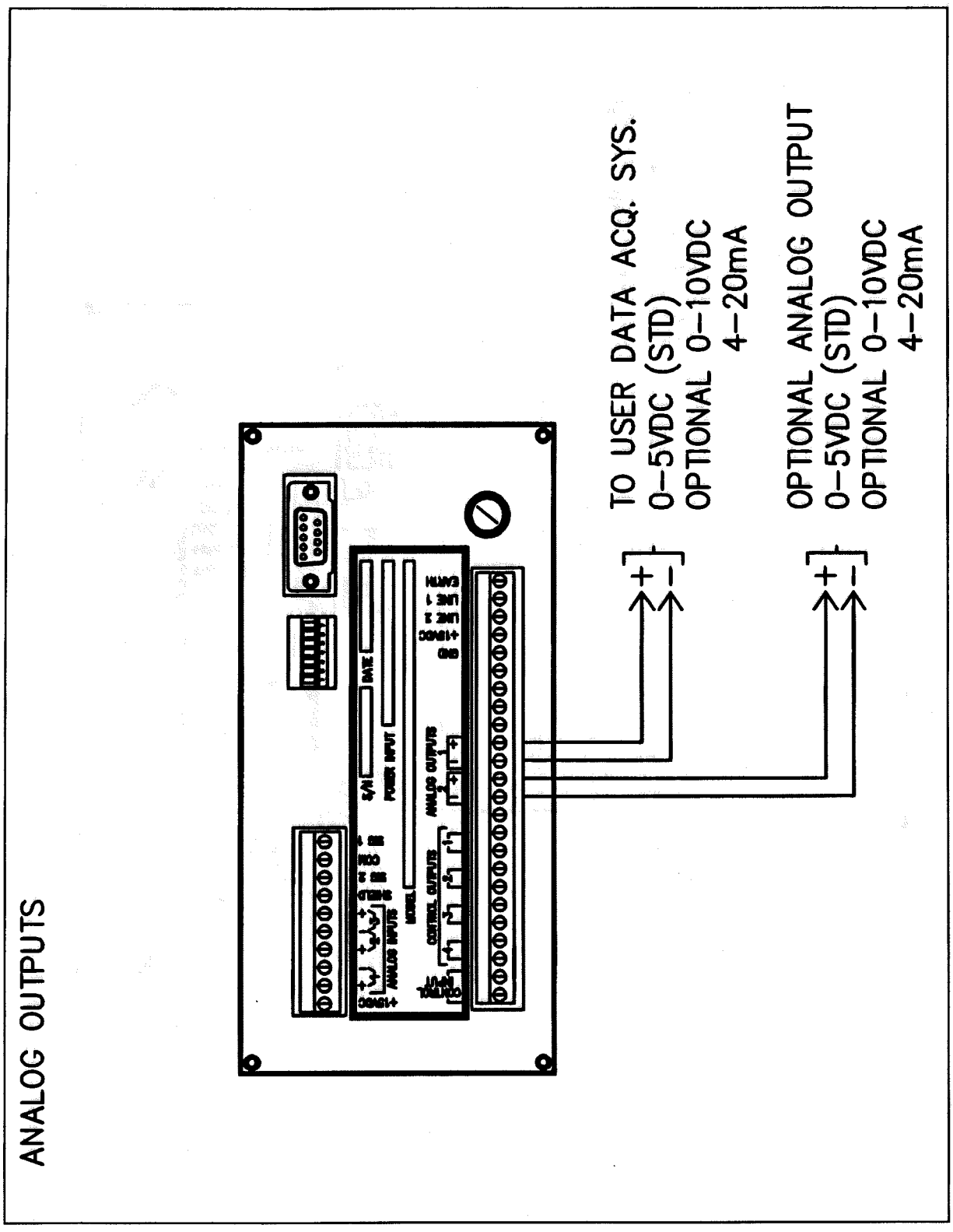

Figure 5.9 Two Wire process Transmitter Input Connections

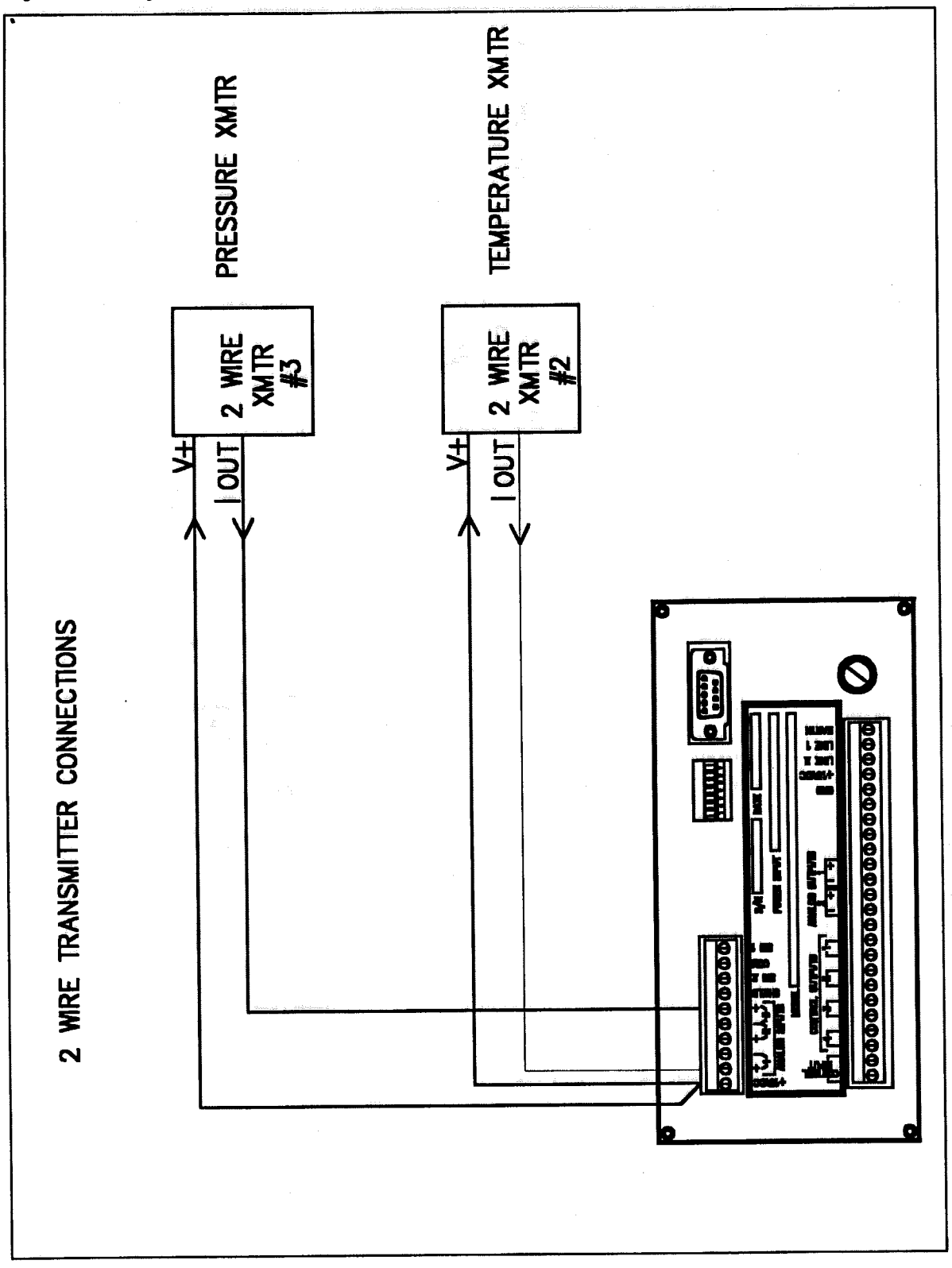

Figure 5.10 Three Wire Process Transmitter Input Connections

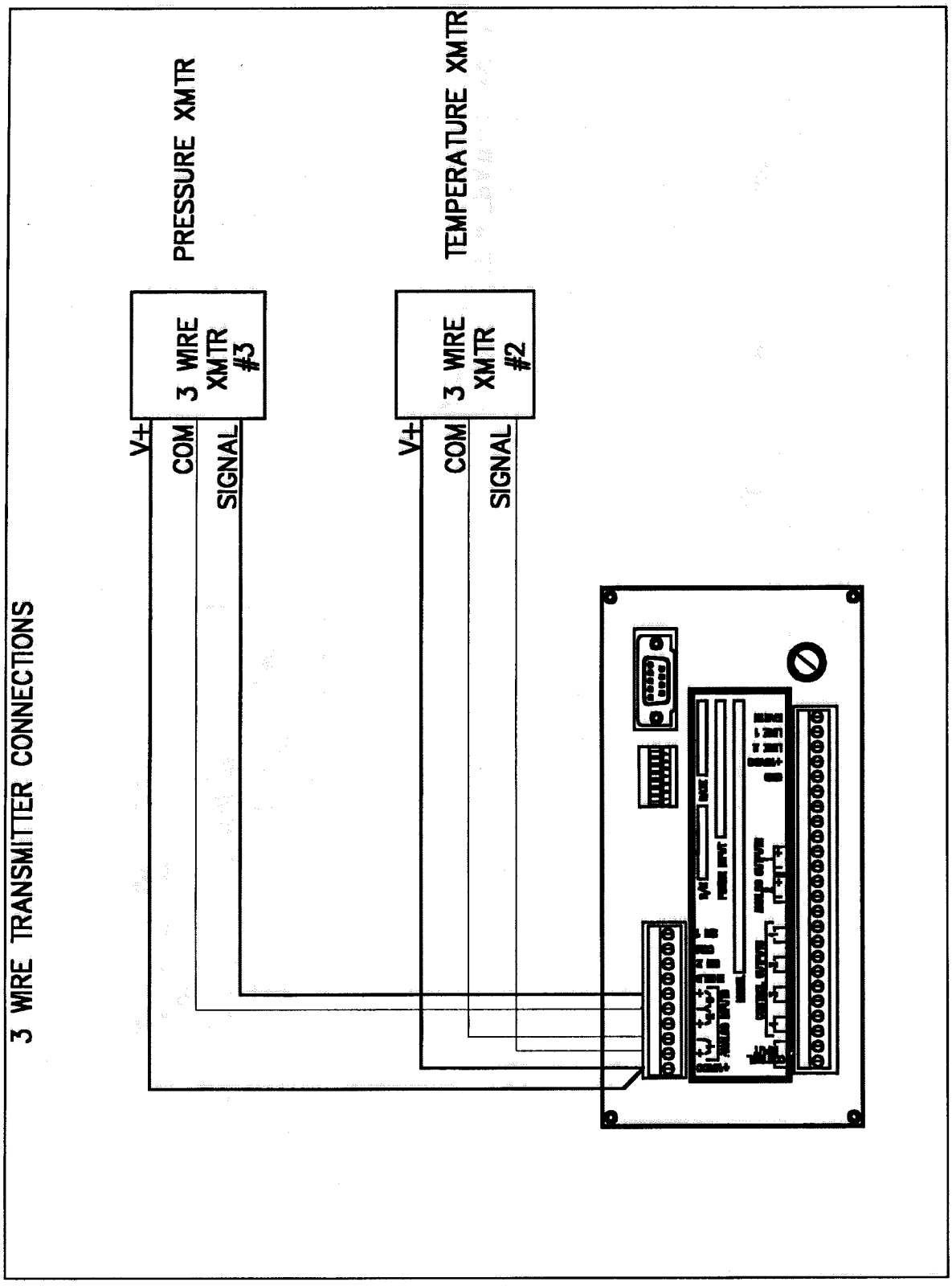

Figure 5.11 Pulse /Alarm Output Wiring

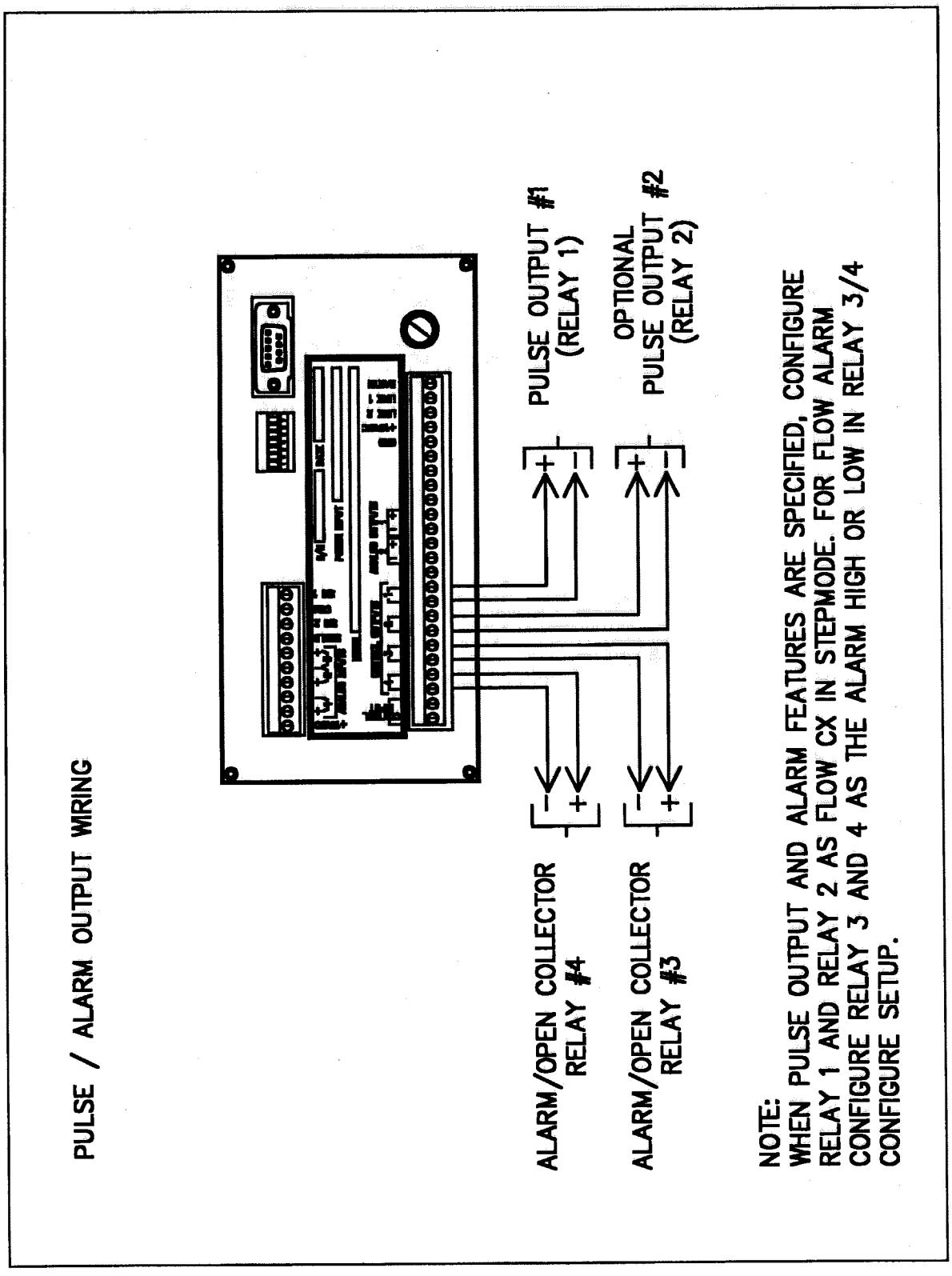

Figure 5.12 Pulse/Control Output Winring

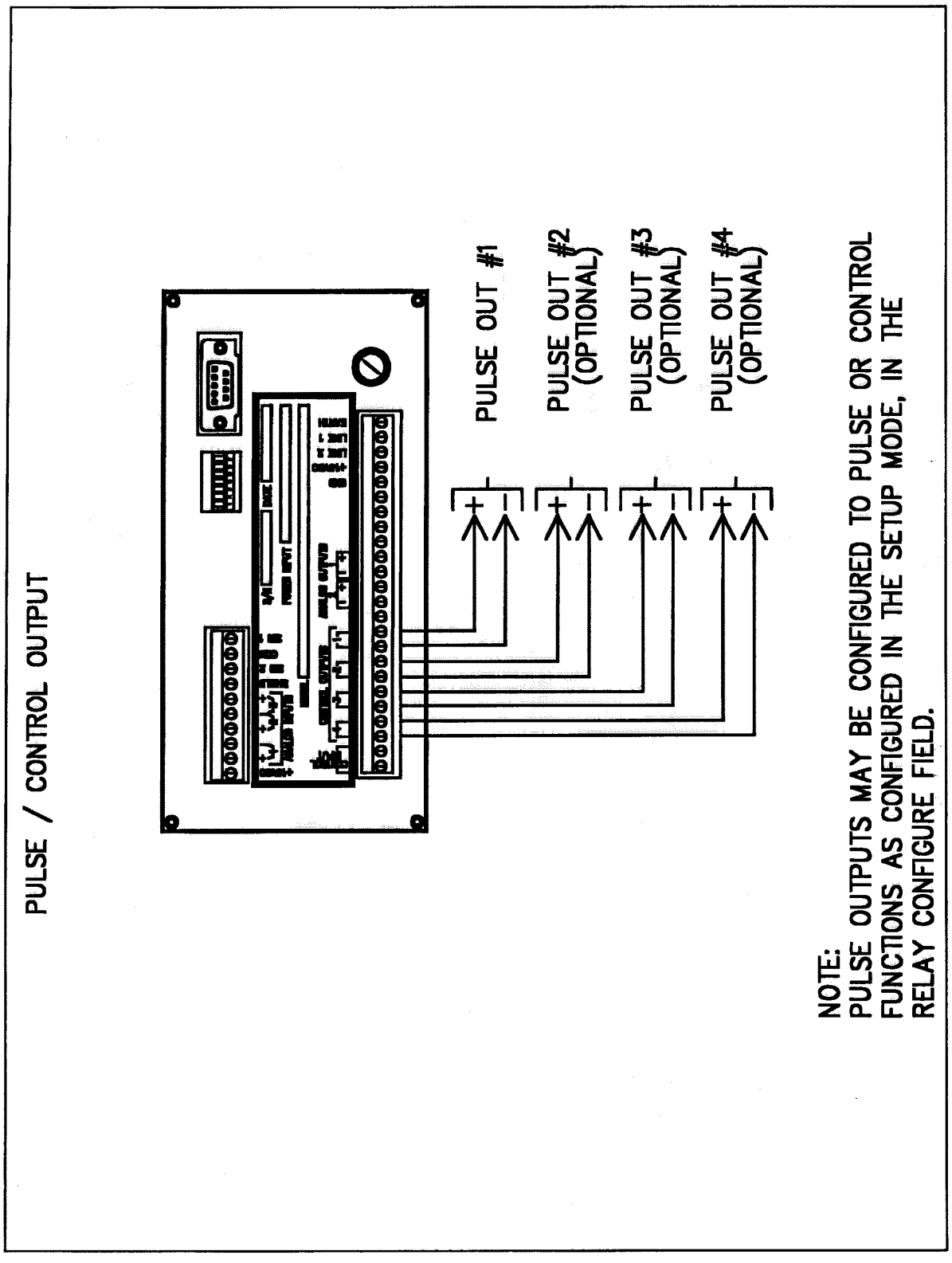

6.SERIAL COMMUNICATIONS

6.1. INTRODUCTION

Flowstar's communication hardware port may configured as RS-232 or RS-422/RS-485(half duplex). The RS-232 port protocols may be configured as REMOTE KEYBOARD, HFC-5 INTERFACE, or PRINTER. The RS-422/RS-485(half duplex) uses only the HFC-5 INTERFACE as the communication protocol. There are three communication protocols:

- REMOTE KEYBOARD this is a special configuration which allows Flowstar to be connected to a remote ANSI keyboard or personnel computer, via the RS-232;
- HFC-6 INTERFACE allows for the two way communication between a host system and Flowstar;
- PRINTER 2010 allow connection of Hoffer supplied panel mount mini printer;
- PRINTER allows a standard serial printer to be connected to the RS-232 port of the Flowstar. A standard serial printer is a output printing device that supports RS-232C interface and ASCII(IBM) character code. The Flowstar can detect an OFF LINE printer if and only if the printer supports this feature through hardware hand-shaking.

The pin out wiring of the DB-9 connector on the back of the Flowstar is not standard. Please refer to drawing 500-0037(Flowstar Communication Cables) when making the connection between Flowstar and your computer

6.2. REMOTE KEYBOARD

In this configuration FLOWSTAR may be connected to a personnel computer, via the RS-232 communication option only. Control is possible by using ANSI compatible communication software. HyperTerminal included in Windows 95, is an example of ANSI compatible communication software. Other examples of ANSI compatible communication software are ProCom, CrossTalk, Telix, and Windows 3.X Terminal. Listed below are the steps necessary to used HyperTerminal software with the Flowstar.

1. Using your mouse, point to the START button located on the Task Bar. Click on START, point to Accessories and drag the pointer of mouse down to the Hyper-Terminal Folder. Click on the HyperTerminal folder and it will appear on the screen.

Figure 6.1 Program Selection

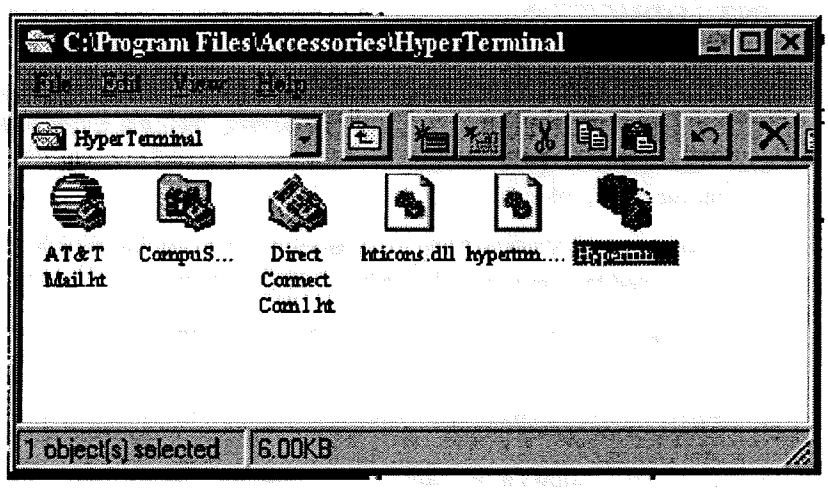

2. Double-click on the Hyper-Terminal icon, the Hyper Terminal program will start.

Figure 6.2 Icon Selection

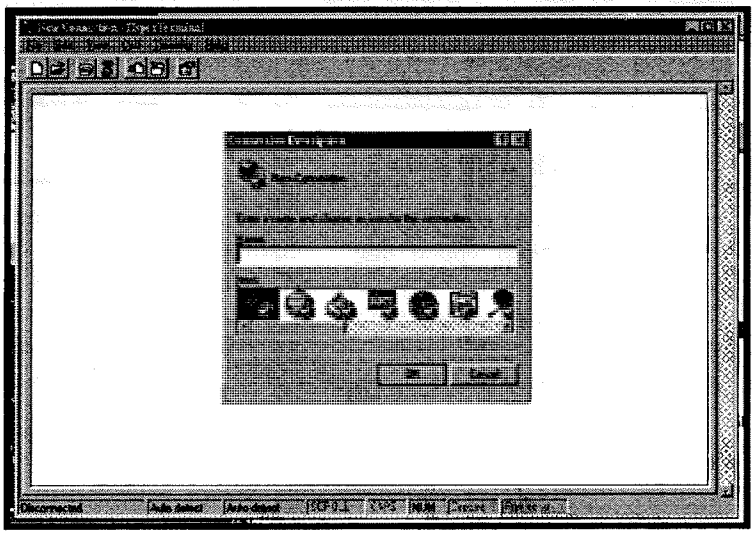

2. When the Hyper-Terminal program starts up, a new Connections Properties box will appear. Enter the name for the new connection and choose an icon. Click OK when finish. Example is shown below.

Figure 6.3 Command Line Description

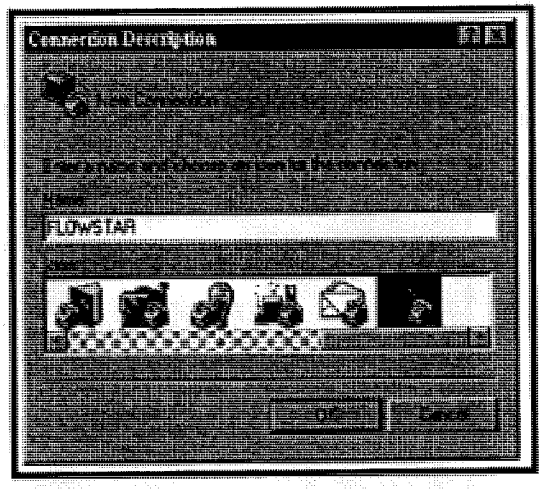

3. Select the port that will be connected to the Flowstar. Click OK when you are finished selecting the port.

Figure 6.4 Direct Connection Properties

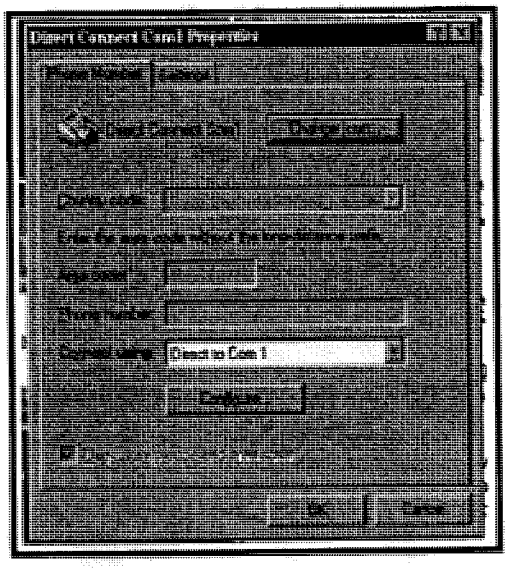

4. The Port Settings dialog box will appear next. Set the Bit Per Second speed to 9600. Set the Flow Control to None. Check the rest of the settings. Click OK when you have finished making the settings

Figure 6.5 COM Port Properties

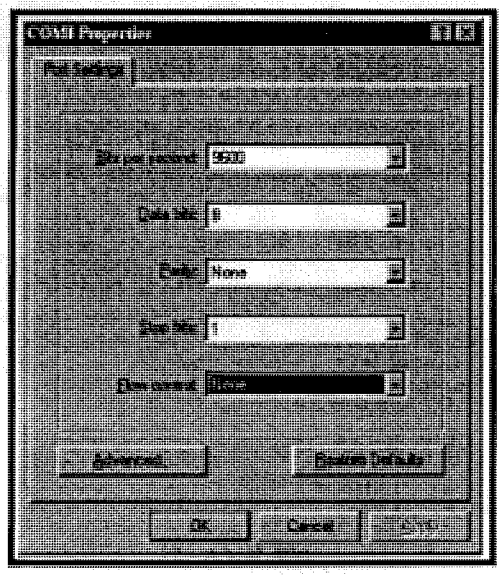

5. Next click on File and then on Properties. The Flowstar Properties dialog will appear. Click on the Settings tab and set Emulation to ANSI. Click OK when you have finished make the setting.

Figure 6.6 Connection Properties

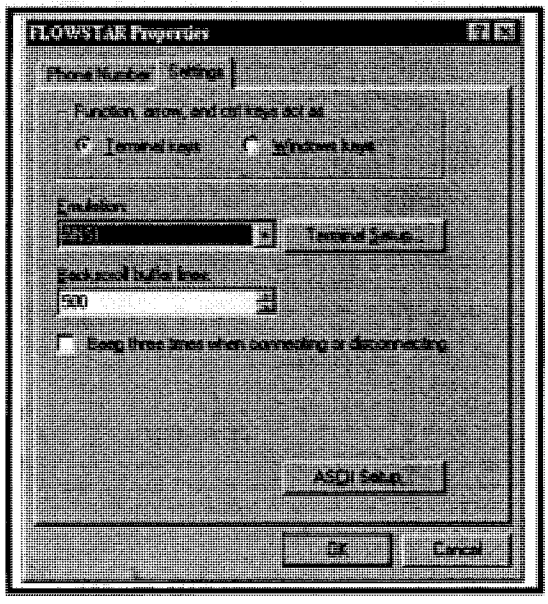

6. You can adjust the size and position of the terminal window in Hyper-Terminal. It should look something like the example shown below when it is properly working.

Figure 6.7 Program Display

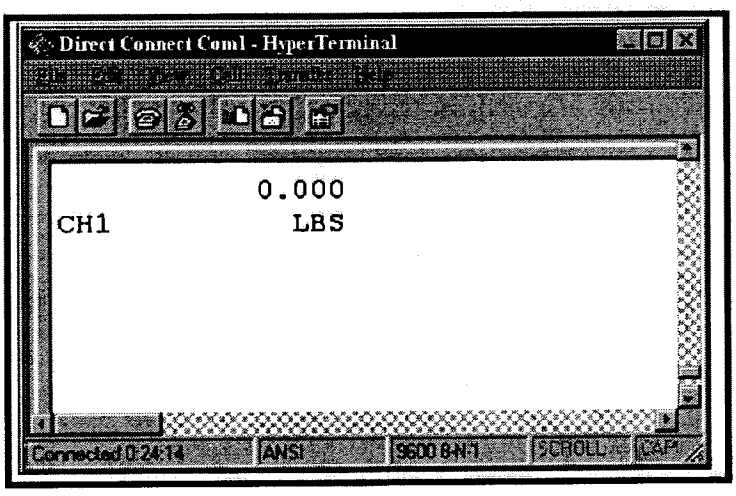

6.2.1. ANSI TEMINAL KEY-MAPPING

Hyper-Terminal will accept commands from the keyboard and send then to the Flowstar. The following table shows the key-mapping used to control Flowstar from a ANSI terminal emulation program.

Table 7 ANSI Key Mapping for Remote Terminal

Flowstar Keys	PC Keys
TOTAL / 1	1
RATE /2	2
TEMP 1 /3	3
TEMP 2 /4 (DENSITY)	4
PRES /5	5
HEAT /DUAL/ 6	6
SEP1 / 7	7
SEP2 / 8	8
AUX1 / 9	9
AUX2 / 0	0
START / .	.
STOP / SHIFT (+/-)	-
MODE	M,m
LAST / <	<
NEXT / >	>,ENTER
SEL	S,s,+
CLEAR	C,c
MAN	N,n
AUTO	A,a
REM/PRINT	R,r

6.2.2. ANSI TERMINAL SCREEN REFRESH

If the display on you PC becomes garbled, press the small letter <k> to refresh the ANSI terminal display.

6.3. HFC-5 PROTOCOL

The Hoffer protocol allows for two way serial communications between the RS-232 or RS-422/RS-485 port to a host computer. The communication string consists of a start transmission code, unit ID number, a command code, specific data requested, data sent, end of transmission and checksum.

6.3.1. CONTROL COMMAND CALLER MESSAGE FORMAT

The following command format is used to perform remote operation of the Flowstar keypad. Execution of these commands will change the displayed information on the unit. The executed command will simply function as if the key were pressed on the actual unit. Flowstar will not respond back to the host with the new displayed data until a read data transmission is generated.

STX | nn | CT | sss | ETX | CKS

STX = 0x02
nn - unit id, 00 - 31
CT - control command
sss - keyboard input key number, ie., { 000 }
ETX - 0x03
CKS = exclusive or of each byte of data between the STX and ETX

Upon completion of the requested command, Flowstar will return an error code for the control command using the following:

STX | ee | ETX | CKS

STX = 0x02
ee - error codes:
00=no errors
01=invalid command
02=data out of range
03=access denied
Access is denied under the following conditions:
- A "FLOW" condition exist.
- Unit is in the SETUP mode.

ETX = 0x03
CKS - exclusive or of each byte of data between the STX and ETX

6.3.2. READ DATA COMMAND CALLER MESSAGE FORMAT

This group of commands allows the host computer system to read process conditions, and unit calibration data. To access data from Flowstar the read request must use the following command format.

STX | nn | RD | sss | ETX | CKS

STX = 0x02
nn - unit id, 00 - 31 for RS485. This value will be 00 for RS232.
RD - Read command.
sss - 3 characters specifying the specific field (000 - 421), as outlined in the Field Format Table.
ETX = 0x03
CKS - exclusive or of each byte of data between the STX and ETX

After receiving a read command from the host Flowstar will respond with the read response command. This response will be in the following format:

STX | ee | ddd | ETX | CKS

STX = 0x02
ee - error codes:
- 00=no errors
- 01=invalid command
- 02=data out of range

ddd - Value=char; response 3 digit numeric from Field Format Table column DDD.
Value = flt; response may consist of 16 numeric characters with decimal point. Leading zeros are not required. ie. 123456.789.
Value = int; response may consist of 16 numeric characters. Leading zeros are not required. ie. 123456789.
ETX = 0x03
CKS - exclusive or of each byte of data between the STX and ETX

6.3.3. WRITE DATA COMMAND CALLER MESSAGE FORMAT

This command format allows the host computer system to write directly to the internal microprocessor registers of Flowstar. To write data to Flowstar the read request must use the following command format.

STX | nn | WR | sss | ddd | ETX | CKS

STX = 0x02
nn - unit id, 00 - 31
WR - Write command
sss - specific data, 3 characters specifying the specific field (000 - 421)
ddd - Value=char; response 3 digit numeric from Field Format Table column.
Value =flt; response may consist of 16 numeric characters with decimal point. Leading zeros are not required. ie. 123456.789.
Value =int; response may consist of 16 numeric characters. Leading zeros are not required. ie. 123456789.
ETX = 0x03
CKS - exclusive or of each byte of data between the STX and ETX

After receiving a write command from the host Flowstar will respond with the read response command. This response will be in the following format:

STX | ee | ETX | CKS

STX = 0x02
ee - error codes:
00 = no errors
01 = invalid command
02 =data out of range
ETX = 0x03
CKS - exclusive or of each byte of data between the STX and ETX

DATA FORMAT DESCRIPTIONS

Data may be transmitted to Flowstar using data formatted as either a character(char), floating(flt) numeric or an integer(int) numeric value.

Refer to the FIELD DATA TABLE for specific field formats.

For all char fields, 3 digit numeric entries are required corresponding to the specific field as listed in the FIELD DATA TABLE.

Floating fields may consist of up to 16 numeric characters with a decimal point. ie., {293.034}. Leading zeroes are not required here.

Integer values may also consist of up to 16 characters. Leading zeroes are not required here.

All characters between the STX and ETX must be ASCII alpha/numeric characters. In addition all alphabetic characters must be in upper case.

6.3.4. CHECKSUM DETERMINATION

The following routine used in the serial protocol calculates a checksum of all data bytes between the STX and ETX character. It takes as input a pointer to a string and the length of the string to calculate the checksum on. Its output is an unsigned character containing the checksum. The checksum itself is an exclusive or of all the bytes of data.

From Boolean algebra:

EXCLUSIVE OR = EOR = $xy' + x'y$

(chksum & ~*in_buff_ptr) | (~chksum & *in_buff_ptr)

Notice the similarity in the code to perform the EXCLUSIVE OR function. The rest of the code in the routine will perform the EOR the correct number of times on the input data string.

The format (ASCII, EBCDII, GRAY CODE, or what ever) of the bytes forming the string is completely irrelevant.

The following is a sample C program which may be used for the determination of the correct checksum.

```
unsigned char check_sum( unsigned char *in_buff_ptr, unsigned int
                    abslen )
{
unsigned short int i;
unsigned char chksum;

  chksum = *in_buff_ptr++;
  for (i = 1; i < abslen; in_buff_ptr++, i++)
 chksum = (chksum & ~*in_buff_ptr) | (~chksum & *in_buff_ptr);
return( chksum );
}
```

6.4. TABLES

The following table indicated the equivalent code values for the specific keypad keys.

Table 8 Equivalent Key Commands

SSS	KEY EQUIVALENT
000	STOP
001	START
002	TOTAL
003	HEAT
004	CLEAR
005	MODE
006	RATE
007	SETP1
008	MAN
009	LAST
010	TEMP1
011	SETP2
012	AUTO
013	NEXT
014	TEMP2
015	AUX1
016	REM
017	SEL
018	PRES
019	AUX2

The following table is the Field Data Table. This information will be used to read all displayed data.

Table 9 Process Data Command

COMMAND	nnn	DESCRIPTION	VALUES
RD	000	CHANNEL 1 TOTAL	flt
RD	001	CHANNEL 1 RATE	flt
RD	002	CHANNEL 2 TEMPERATURE	flt
RD	003	FLOWING DENSITY	flt
RD	004	CHANNEL 3 PRESSURE	flt
RD	007	AUX 1 (RATE or TOTAL)	flt
RD	008	AUX 2 (RATE or TOTAL)	flt
RD	011	CHANNEL 1 ACCUMULATED TOTAL	flt
RD	013	AUDIT TRAIL CALIBRATION	int
RD	014	AUDIT TRAIL CONFIGURATION	int
RD	015	ALARMS	char

The following table is the Field Data Table. This information will be used to read and write to the internal registers of Flowstar.

Table 10 Setup Command Data

COMMAND	SSS	SPECIFIC FIELD	VALUES	FIELD SELECTION	DDD
RD/WR	018	Z-FACTOR METHOD	char 2006 only with special gas applications	SINGLE Z-FACTOR TABLE	173 174
RD/WR	019	CH1 TOTAL SEE TABLE 11 FOR DEFINITION.	char	UNIT 1 UNIT 2 UNIT 3 UNIT 4 UNIT 5	000 001 002 003 004

COMMAND	SSS	SPECIFIC FIELD	VALUES	FIELD SELECTION	DDD
RD/WR	020	CH1 RATE SEE TABLE 11 FOR DEFINITION.	char	UNIT 1/MIN UNIT 1/HR UNIT 1/SEC UNIT 2/MIN UNIT 2/HR UNIT 2/SEC UNIT 3/MIN UNIT 3/HR UNIT 3/SEC UNIT 4/MIN UNIT 4/HR UNIT 4/SEC UNIT 5/MIN UNIT 5/HR UNIT 5/SEC	009 010 011 012 013 014 015 016 017 018 019 020 021 022 023
RD/WR	021	TEMP UNITS		DEG F DEG R DEG C DEG K	096 097 098 099
RD/WR	022	PRESSURE UNITS		PSIG PSIA ATM BAR A BAR G KPAS A KPAS G	089 090 091 092 093 094 095
RD/WR	023	CH1 DATA ATIME	flt	0.0 - 10.0	
RD/WR	024	CH1 POINT NUMBER	int	00 - 20	
RD/WR	025	C1 PULSE WEIGHT	flt		
RD/WR	026	FLOW CALC METHOD	char	SINGLE KFACTOR KFACTOR FWD REV KFACTOR	086 086 087
RD/WR	027	DEF TEMP	flt	In selected temperature unit.	

COMMAND	SSS	SPECIFIC FIELD	VALUES	FIELD SELECTION	DDD
RD/WR	028	DEF PRES	flt	In selected pressure unit.	
RD/WR	029	B TEMP	flt	In selected temperature unit. Used on Flowstar 2006.	
RD/WR	030	B PRES	flt	In selected pressure unit. Used on Flowstar 2006	
RD/WR	031	DEF DENS (CH1)	flt	Unit is LBS/GAL or KG/LIT depending on the setting of S1-1.	
RD/WR	032	DEF KFACTOR	flt	Unit is P/GAL or P/LIT depending on the setting of S1-1.	
RD/WR	033	DEF Z-FACTOR (CH1)	flt	Used when Z-FACTOR METHOD is set to SINGLE Z_FACTOR.	
RD/WR	034	USER DEFINE (CH1)	flt	Unit is USER GAL TO UDEF or USER LIT TO UDEF depending on the setting of S1-1.	
RD/WR	035 thru 054	FWD FREQ 1 thru FWD FREQ 20	flt	Unit is Hz(cycles per second).	
RD/WR	055 thru 074	FWD KFAC 1 thru FWD KFAC 20	flt	Unit is P/GAL or P/LIT depending on the setting of S1-1.	
RD/WR	075 thru 094	REV FREQ 1 thru REV FREQ 20	flt	Unit is Hz(cycles per second).	
RD/WR	094 thru 114	REV KFAC 1 thru REV KFAC 20	flt	Unit is P/GAL or P/LIT depending on the setting of S1-1.	
RD/WR	115	ATD DATA ATIME	flt	0.0 - 10.0	
RD/WR	116	CH2 POINT	int	2 - 5	

COMMAND	SSS	SPECIFIC FIELD NUMBER	VALUES	FIELD SELECTION	DDD
RD/WR	119 thru 123	CH2 MP UNIT 1 thru 5	flt	In selected temperature unit.	
RD/WR	082	CH3 POINT NUMBER	int	2 - 5	
RD/WR	127 thru 131	CH3 MP UNIT 1 thru 5	flt	In selected pressure unit.	
RD/WR	132 133	AUX1 UNITS AUX2 UNITS	char	UNIT 1 UNIT 2 UNIT 3 UNIT 4 UNIT 5 UNIT 1/MIN UNIT 1/HR UNIT 1/SEC UNIT 2/MIN UNIT 2/HR UNIT 2/SEC UNIT 3/MIN UNIT 3/HR UNIT 3/SEC UNIT 4/MIN UNIT 4/HR UNIT 4/SEC UNIT 5/MIN UNIT 5/HR UNIT 5/SEC CONVERSION TOTAL UNIT 1 CONVERSION TOTAL UNIT 2 CONVERSION TOTAL UNIT 3 CONVERSION RATE UNIT 1 CONVERSION RATE UNIT 2 CONVERSION RATE UNIT 3 CONVERT DENSITY	000 001 002 003 004 009 010 011 012 013 014 015 016 017 018 019 020 021 022 023 036 037 038 039 040 041 042
RD/WR	134	ALM1 S-H Rate Unit	flt	In selected CH1 Rate Unit.	

COMMAND	SSS	SPECIFIC FIELD	VALUES	FIELD SELECTION	DDD
RD/WR	135	ALM1 S- L Rate Unit	flt	In selected CH1 Rate Unit.	
RD/WR	136	ALM1 DBA Rate Unit	flt	In selected CH1 Rate Unit.	
RD/WR	137	ALARM1 AUDIBLE	char	OFF HIGH ONLY LOW ONLY HIGH AND LOW	131 132 133 134
RD/WR	138	ALM2 S-HI Temp Unit	flt	In selected Temperature Unit.	
RD/WR	139	ALM2 S-LO Temp Unit	flt	In selected Temperature Unit.	
RD/WR	140	ALM2 DBAN Temp Unit	flt	In selected Temperature Unit.	
RD/WR	141	ALARM2 AUDIBLE	char	OFF HIGH ONLY LOW ONLY HIGH AND LOW	131 132 133 134
RD/WR	142	ALM3 S-HI Pres. Unit	flt	In selected Pressure Unit.	
RD/WR	143	ALM3 S-L0 Pres. Unit	flt	In selected Pressure Unit.	
RD/WR	144	ALM3 DBAN Pres. Unit	flt	In selected Pressure Unit.	
RD/WR	145	ALARM3 AUDIBLE	char	OFF HIGH ONLY LOW ONLY HIGH AND LOW	131 132 133 134
RD/WR	146 149	DA1 CONFIG DA2 CONFIG	char	MIMIC CH1 RATE MIMIC CH2 TEMP. MIMIC CH3 PRES. MIMIC C1 FWD/REV	117 118 119 120
RD/WR	147	DA1 MIN	flt	In MIMIC channel's Unit.	

COMMAND	SSS	SPECIFIC FIELD	VALUES	FIELD SELECTION	DDD
		Unit			
RD/WR	148	DA1 MAX Unit	flt	In MIMIC channel's Unit.	
RD/WR	150	DA2 MIN Unit	flt	In MIMIC channel's Unit.	
RD/WR	151	DA2 MAX Unit	flt	In MIMIC channel's Unit.	
RD/WR	152 153	RELAY1 CONFIG RELAY2 CONFIG	char	ALARM1 HIGH ALARM1 LOW ALARM2 HIGH ALARM2 LOW ALARM3 HIGH ALARM3 LOW ALARM AUDIBLE FORWARD SCALED PULSE REVERSE SCALED PULSE	121 122 123 124 125 126 127 128 129
RD/WR	154 155	RELAY3 CONFIG RELAY4 CONFIG	char	ALARM1 HIGH ALARM1 LOW ALARM2 HIGH ALARM2 LOW ALARM3 HIGH ALARM3 LOW ALARM AUDIBLE	121 122 123 124 125 126 127
RD/WR	156	SERIAL MODE	char	RS232 RS422 RS485	153 154 155
RD/WR	157	SERIAL MODE NUM	int	00 - 31	
RD/WR	158	SERIAL BAUD RATE	char	9600 4800 2400 1200 600 300 150 75	156 157 158 159 160 161 162 163

COMMAND	SSS	SPECIFIC FIELD	VALUES	FIELD SELECTION	DDD
RD/WR	159	SERIAL HANDSHAKE	char	NONE HARDWARE DTR XON/XOFF	164 165 166
RD/WR	160	SERIAL PROTOCOL	char	REMOTE KEYBOARD HOFFER INTERFACE PRINTER LC24X PRINTER	167 168 169 170
RD/WR	161	PASSWORD	int	0000-9999	
RD/WR	162	DATE	tim	mmddyy	
RD/WR	163	DAY OF WEEK	char	MON TUE WED THU FRI SAT SUN	134 135 136 137 138 139 140
RD/WR	164	TIME 24 HOUR CLK	tim	hhmmss	

Table 11 Unit Descriptions

Switch S1-1 Setting	ENGLISH	METRIC
UNIT 1	GGE	GLE
UNIT 2	LBS	KG
UNIT 3	ACF	AM3
UNIT 4	OZ	GRAMS
UNIT 5	TONS	MTON
CONVERSION UNIT 1	GLE	GGE
CONVERSION UNIT 2	KG	LBS
CONVERSION UNIT 3	AM3	ACF

6.5. PRINTER

In the PRINTER mode the Flowstar will generate Delivery Tickets when ever the REM/PRINT key is depressed. The attached device must be a RS-232C serial printer that supports the ASCII(IBM) character code table. The Flowstar detects printer status only when the printer supports this feature through hardware hand-shaking. To enable the printer support the following settings must be made at the Flowstar.

1. SERIAL MODE = RS232
2. BAUD RATE = baud rate of attached device.
3. HANDSHAKE = NONE
4. SERIAL PROTOCOL = PRINTER.2010 or PRINTER

The pin connections of the DB-9 communications connection on the back of Flowstar are not standard. Please refer to 500-0037, *FLOWSTAR COMMUNICATION CABLES* when making your own cable to connect a printer to the FLOWSTAR. If you printer supports PAPER OUT detection, then contact Hoffer Flow Controls for information on the proper wiring of the Flowstar to your printer.

7.DRAWINGS

DWG NO.	SH	REV
500-0037	1	A

REVISIONS

ZONE	REV	DESCRIPTION	DATE	APP
	A	ZN B1, PIN 9 WAS PIN 5, ADDED TX DATA + AND RX DATA -. (CS)	941102	

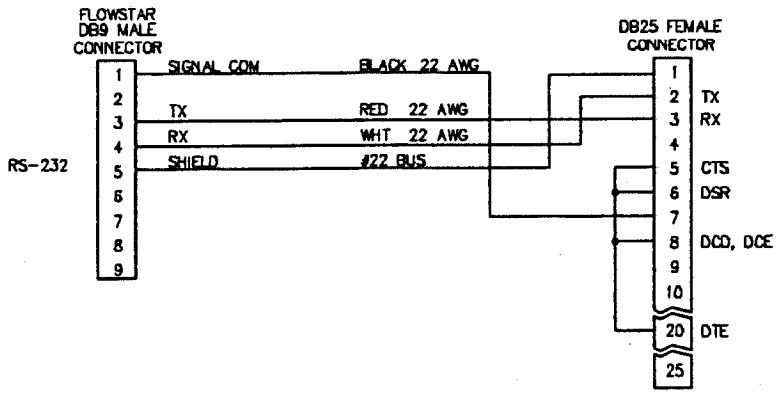

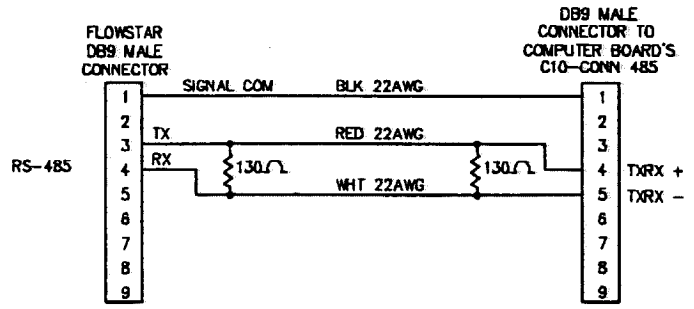

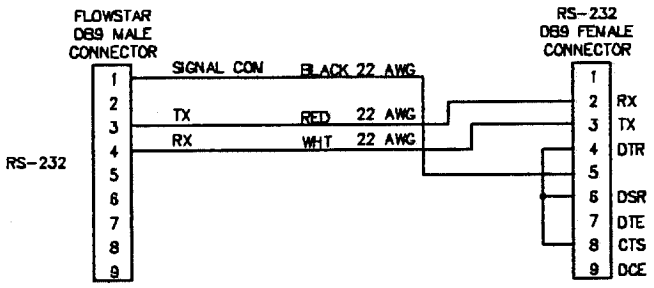

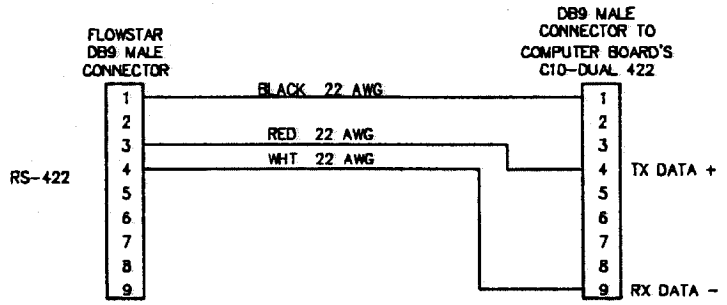

		MATERIAL	DRAWN SWEET	DATE 941018
			CHECK BRE	941024
			PRODUCTION	
		FINISH	PROJ ENG J.DEFEO	941024
			MACH SHOP	
NEXT ASSY	USED ON			
APPLICATION				

UNLESS OTHERWISE SPECIFIED DIMENSIONS ARE IN INCHES, TOLERANCES OTHER THAN THE SIZE OF RAW MATERIAL SHALL BE HELD AS FOLLOWS:
2 PLACE DECIMALS ± .01
3 PLACE DECIMALS ± .005
FRACTIONAL ± 1/64
ANGULAR ± 1/27

HOFFER FLOW CONTROLS, INC
ELIZABETH CITY, NC 27909

TITLE
FLOWSTAR COMMUNICATIONS CABLES

SIZE	CAGE CODE	DWG NO	REV
C	33321	500-0037	A

SCALE NONE SHEET 1 OF 1

DWG NO. 500-0041 SH 1 RE B

REVISIONS				
ZONE	REV	DESCRIPTION	DATE	APP
	A	REMOVED MODEL 870. (CS)	941214	JD
	B	ADDED MODEL 770. (CS)	950912	

ELECTRICAL CONNECTIONS:

MODEL 570 1/2" MNPT. 3 WIRES 18AWG
- RED + POWER/SIGNAL
- BLACK - POWER/SIGNAL
- GREEN CASE GROUND

MODEL 770
- RED +INPUT
- GREEN -INPUT
- BLACK +OUTPUT
- WHITE -OUTPUT
- BROWN CASE GROUND

MODEL 770

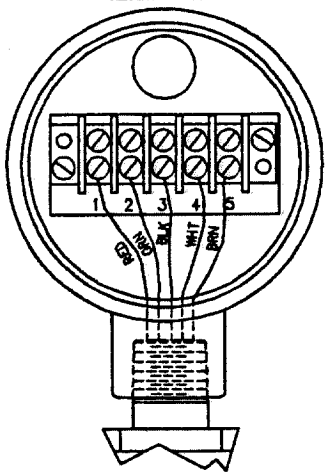

MODEL 570

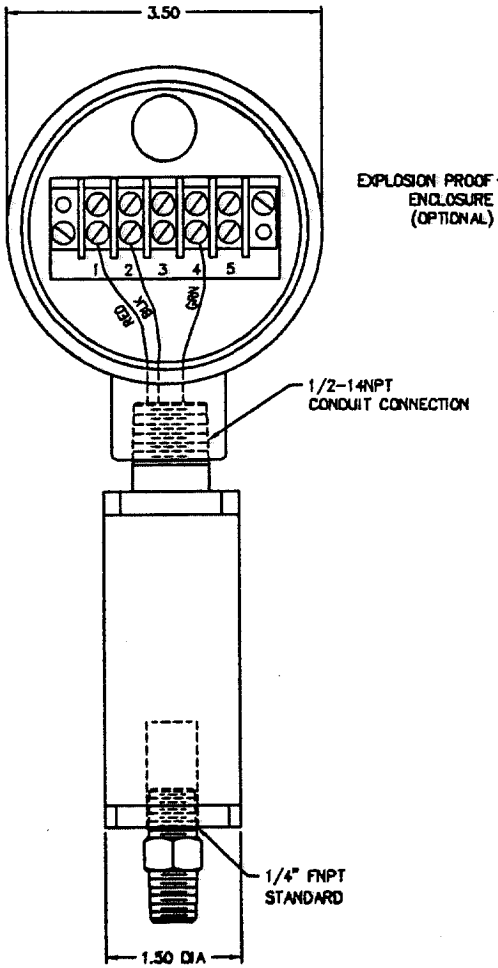

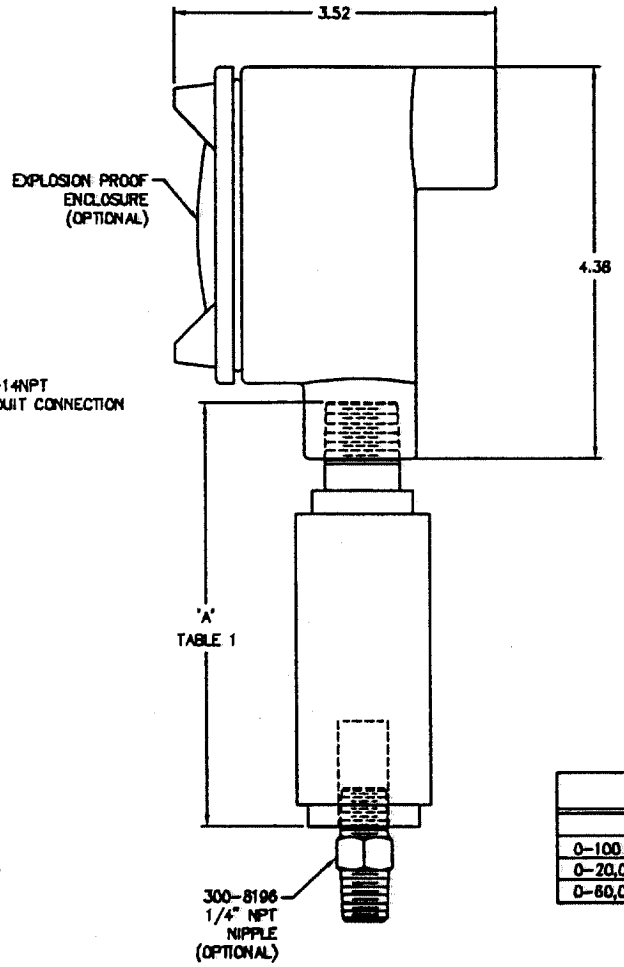

TABLE 1	DIM 'A'	
RANGE	MODEL 570	MODEL 770
0-100 THRU 0-15,000 PSIS	4.94	5.19
0-20,000 THRU 0-50,000 PSIS	5.06	5.32
0-60,000 THRU 0-100,000 PSIS	5.81	6.06

		MATERIAL	DRAWN SWEET	DATE 941102
			CHECK J.DEFEO	941102
			PRODUCTION	
		FINISH	PROJ ENG KRH	941102
			MACH SHOP	
NEXT ASSY	USED ON			
APPLICATION				

UNLESS OTHERWISE SPECIFIED DIMENSIONS ARE IN INCHES. TOLERANCES OTHER THAN THE SIZE OF RAW MATERIAL SHALL BE HELD AS FOLLOWS:
- 2 PLACE DECIMALS ± .01
- 3 PLACE DECIMALS ± .005
- FRACTIONAL ± 1/64
- ANGULAR ± 1/2°

HOFFER FLOW CONTROLS, INC
ELIZABETH CITY, NC 27909

TITLE
INSTALLATION DRAWING, MODEL 570 & 770 PRESSURE TRANSMITTER

SIZE	CAGE CODE	DWG NO	REV
C	33321	500-0041	B
SCALE NONE		SHEET 1 OF 1	

H:\DRAWINGS\500\50000411.DWG

DWG NO.	SH	REV
TRANS-102	1	C

REVISIONS

ZONE	REV	DESCRIPTION		DATE	APP
	A	DRAWING NO. WAS TRANS-102.	(CS)	951106	JD
	B	REVISED PER CPA 310.	(CS)	960214	KRH
	C	DRAWING NO. WAS 500-0267	(CS)	961031	

NOTES:

1. TWO WIRE TRANSMITTER IS A WEED INSTRUMENT MODEL 4154. RANGES AVAILABLE OVER -100 TO 600° C, CONSULT FACTORY FOR AVAILABLE SPANS.

   OUTPUT: 4.0 TO 20mA
   RTD: 1000 OHM @ 0° C
   POWER SUPPLY: 9.5V TO 36VDC.
2. THREAD CONNECTIONS ARE 1/2" NPT FOR CONDUIT AND 1/2" AUTOCLAVE FOR PROCESS TAP.
3. OPERATIONAL TEMPERATURE LIMITS 0° - 60° C.

PT102-X-1000-2-4154(*)-GUAC/O-X

* SPECIFY TEMPERATURE RANGE WITH AT LEAST A 35° F SPREAD.

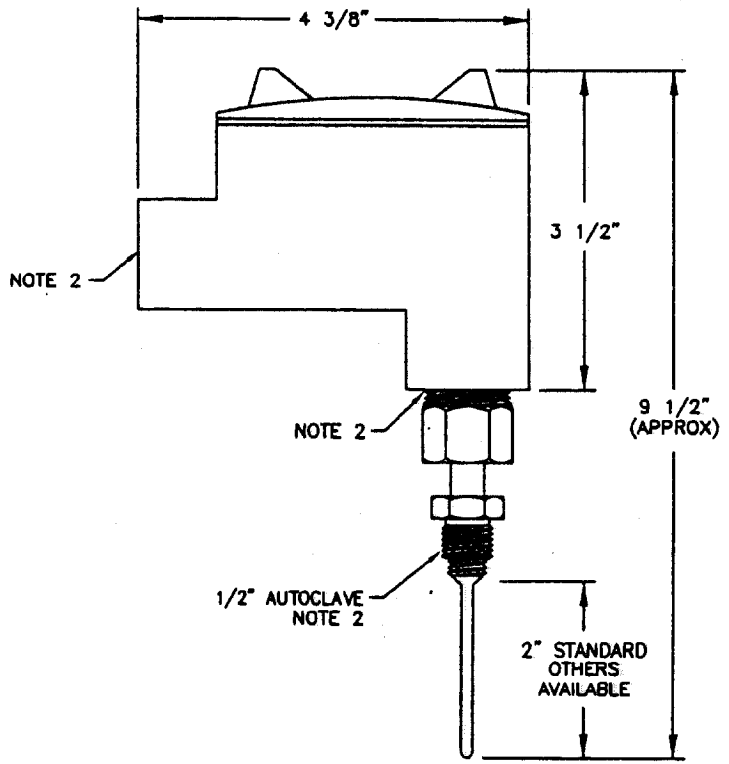

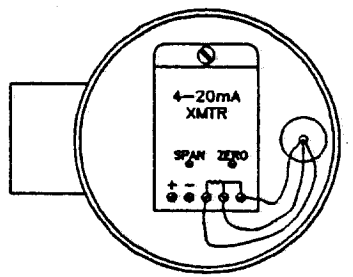

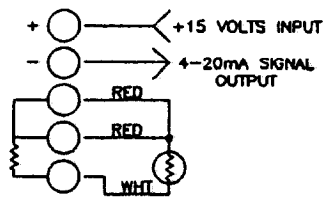

REPLACES 500-0267

		MATERIAL	DRAWN DW	DATE 2-7-92
			CHECK JD	2-7-92
			QA H.COVELL	2-7-92
		FINISH	PROJ ENG KRH	2-7-92
			MACH SHOP	
NEXT ASSY	USED ON			
APPLICATION				

UNLESS OTHERWISE SPECIFIED DIMENSIONS ARE IN INCHES, TOLERANCES OTHER THAN THE SIZE OF RAW MATERIAL SHALL BE HELD AS FOLLOWS:

2 PLACE DECIMALS	± .01
3 PLACE DECIMALS	± .005
FRACTIONAL	± 1/64
ANGULAR	± 1/2°

HOFFER FLOW CONTROLS, INC
ELIZABETH CITY, NC 27909

TITLE: INSTALLATION DRAWING, PT102- TEMPERATURE PROBE

SIZE	CAGE CODE	DWG NO	REV
C	33321	TRANS-102	C

SCALE: NONE SHEET 1 OF 1

DWG NO.	TRANS-100	SH 1	REV B

REVISIONS

ZONE	REV	DESCRIPTION	DATE	APP
	A	DRAWING NO. WAS TRANS-100. (CS)	950831	JD
	B	DRAWING NO. WAS 500-0179 DELETED NOTE 3	990524	

NOTES:

1. TWO WIRE TRANSMITTER IS A WEED INSTRUMENT MODEL 4111. RANGES AVAILABLE OVER -100 TO 600° C, CONSULT FACTORY FOR AVAILABLE SPANS.

   OUTPUT: 40 TO 20mA
   RTD: 100 OHM @ 0° C
   POWER SUPPLY: 9.5V TO 36VDC.

2. THREAD CONNECTIONS ARE 1/2" NPT ON PROCESS TAP AND FOR CONDUIT.

PT101-X-2-100-4150(*)-GUAC/O-X

* SPECIFY TEMPERATURE RANGE WITH AT LEAST A 35° F SPREAD.

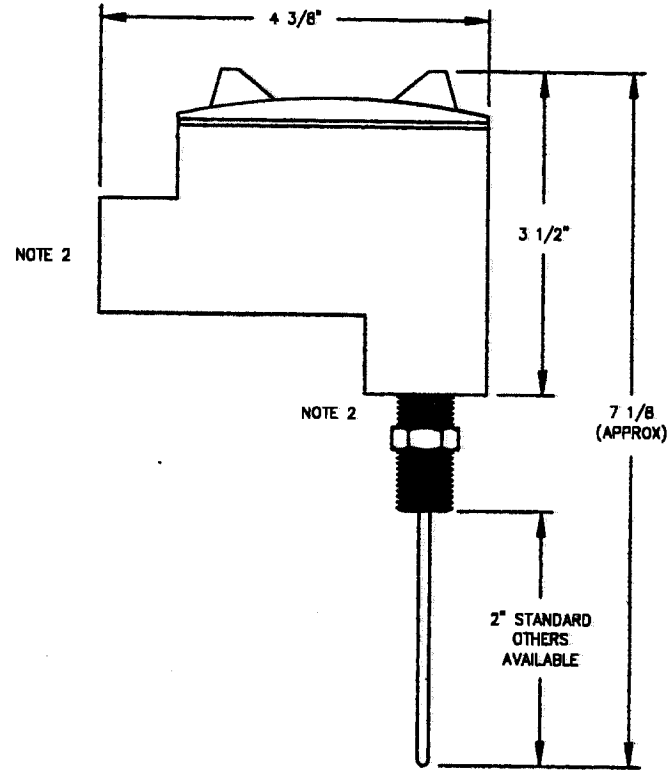

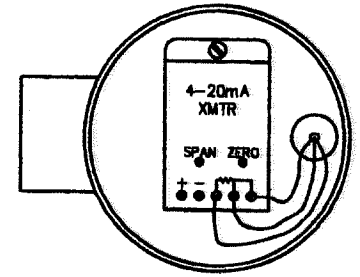

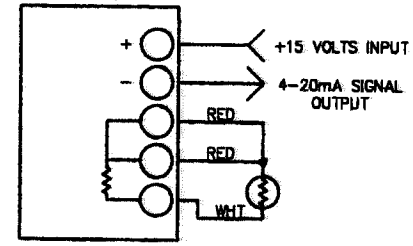

REPLACES 500-0179

MATERIAL	DRAWN	DW	DATE 12-18-97
	CHECK	JD	12-18-97
	QA	H.COVELL	12-18-97
FINISH	PROJ ENG	KRH	12-18-97
	MACH SHOP		

NEXT ASSY | USED ON

APPLICATION

UNLESS OTHERWISE SPECIFIED DIMENSIONS ARE IN INCHES. TOLERANCES OTHER THAN THE SIZE OF RAW MATERIAL SHALL BE HELD AS FOLLOWS:

2 PLACE DECIMALS	± .01
3 PLACE DECIMALS	± .005
FRACTIONAL	± 1/64
ANGULAR	± 1/2°

HOFFER FLOW CONTROLS, INC
ELIZABETH CITY, NC 27909

TITLE

INSTALLATION DRAWING, PT101

SIZE	CAGE CODE	DWG NO	REV
C	33321	TRANS-100	B

SCALE NONE | SHEET 1 OF 1